Bell Helicopter
A Textron Company

TECHNICAL BULLETIN 407-12-98
23 August 2012
Revision A, 11 January 2018

MODEL AFFECTED: **407**

SUBJECT: **AUXILIARY FINS P/N 407-023-003-ALL ASSEMBLY AND HORIZONTAL STABILISER P/N 407-023-801-ALL ASSEMBLY, MODIFICATION OF.**

HELICOPTERS AFFECTED: **Serial numbers 53000 through 53900, 53911 through 54299, 54300 and subsequent.**

COMPLIANCE: At customer's option.

DESCRIPTION:

This bulletin provides instructions to modify the auxiliary fins to facilitate the installation and maintenance of aftermarket strobe anti-collision/position light assembly (STC SA800EA). The modification gives access to the strobe light connector to permits replacement of the strobe tube without removal of the spacer. Applicability of this bulletin to any spare part shall be determined prior to its installation on an affected helicopter. **Revision A** of this bulletin provides a correction to referenced views and details within the accomplishment instructions as well as current consumable material codes required.

APPROVAL:

The engineering design aspects of this bulletin are Transport Canada Civil Aviation (TCCA) approved.

CONTACT INFO:

For any questions regarding this bulletin, please contact:

Bell Helicopter Product Support Engineering - Light Helicopters
Tel: 450-437-2862 / 1-800-363-8023 / pselight@bh.com

MANPOWER:

Approximately 6 man-hours are required to complete this bulletin. This estimate is based on hands-on time, and may vary with personnel and facilities available.

WARRANTY:

There is no warranty credit applicable for parts or labor associated with this bulletin.

MATERIAL:

Required Material:
The following material is required for the accomplishment of this bulletin and may be obtained through your Bell Helicopter Textron Supply Center.

Part Number	Nomenclature	Qty (Note)
MS21266-1N	Grommet	1

Consumable Material:
The following material is required to accomplish this bulletin, but may not require ordering, depending on the operator's consumable material stock levels. This material may be obtained through your Bell Helicopter Textron Supply Center.

Part Number	Nomenclature	Reference * (Note)
2000-00245-01	Bonding Adhesive, General Purpose	C-317
2000-01042-00	Adhesive, Urethane Base	C-301
2230-00425-00	Epoxy polyamide primer	C-204
2110-06257-00	Methyl-Ethyl-Ketone (MEK)	C-309 (see note)
2100-00061-00	Acetone	C-316 (see note)
2100-06673-00	Isopropyl Alcohol	C-385
2110-00010-00	Aliphatic Naphtha	C-305 (see note)
2110-06227-00	Toluene	C-306
2100-00345-00	Chemical Film Material	C-100
2230-00425-00	Primer	C-204
2000-06383-00	Tape	C-426
5060-60160-00	Silicon Carbide Abrasive Cloth or Paper, 400 Grit	C-423

* C-XXX numbers refer to the consumables list in the BHT-ALL-SPM, Standard Practices Manual

NOTE : Can be used as alternates.

SPECIAL TOOLS:

None required.
WEIGHT AND BALANCE:

Not affected.

ELECTRICAL LOAD DATA:

Not affected.

REFERENCES:

BHT-407-IPB, Illustrated Parts Breakdown
BHT-407-MM, Maintenance Manual
BHT-ALL-SRM, Structural Repair Manual
BHT-ALL-SPM, Standard Practice Manual

PUBLICATIONS AFFECTED:

None affected.

ACCOMPLISHMENT INSTRUCTIONS:

-NOTE-

The procedure below applies to both L/H and R/H auxiliary fins.

1. Remove auxiliary fins and horizontal stabilizer from aircraft (1, Figure 1)(Ref. BHT-407-MM-5, Chapter 53).

-NOTE-

Do not debond skins and doublers during cutting operation.

2. Using spacer (2, Figure 1) as guide, drill through auxiliary fins (1). Hole is to be dimensioned as shown in Figure 1, View A and Detail B.

   a. Deburr all holes and edges; remove debris and loose material. Deburr not to exceed 0.005 inch (0.13 mm) depth.

   b. Undercut core (6) 0.20 inch (5.08 mm) from skin cut-outs as shown in section B-B. Do not damage skins (5 and 7) during undercutting operation.

   c. Inspect exposed area of skins (5 and 7), doublers (3 and 4) and core (6) for corrosion, damage, delamination or contamination. If any such damage exists, submit to Product Support Engineering with additional information describing extent of damage (Ref. BHT-ALL-SRM, Chapter 2).

-NOTE-

Do not soak parts to be bonded with cleaner (C-316). Use of a moistened rag is recommended. Blow honeycomb cavities with dry shop air to remove dirt particles.

3. Clean modification area and prepare for bonding.

   a. Fill core undercut with adhesive using bonding adhesive (C-317). See section B-B. Tape (C-426) may be used to hold adhesive in place.

   b. Remove excess adhesive squeeze-out.

   c. Allow to cure at room temperature for 24 hours (Alternate Cure, Ref BHT-ALL-SRM, Chapter 3, Table 3-25).

4. Inspection and finishing.

   a. Inspect for voids or debonded areas by performing a tap test inspection. Voids shall not exceed 10% of total bonded area. No one void shall exceed 0.25 square inch (161 square mm) in area. A maximum of two voids within a 6.0 inch (152 mm) diameter circle is allowed. No edge void is allowed.

   b. Inspect spacer (2, Figure 1) for damage that may have occurred during cutting procedures. Remove and replace if needed.

   c. Refinish all bare metal surfaces using primer (C-204); reference BHT-ALL-SPM, Chapter 3.

5. Horizontal stabilizer modification (Figure 1, view D).

   a. Remove existing grommet.

   b. Enlarge existing hole from 0.60 inch (15.24 mm) to 1.00 inch (25.4 mm).

   c. Install MS21266-1N grommet as required using bonding adhesive (C-301); prepare surface for adhesive using abrasive paper 400 grit (C-426).

   d. Re-install horizontal stabilizer and auxiliary fins on aircraft (1, Figure 1)(Ref. BHT-407-MM-5, Chapter 53).

6. Make an entry in the helicopter logbook and historical service records indicating compliance with this Technical Bulletin.

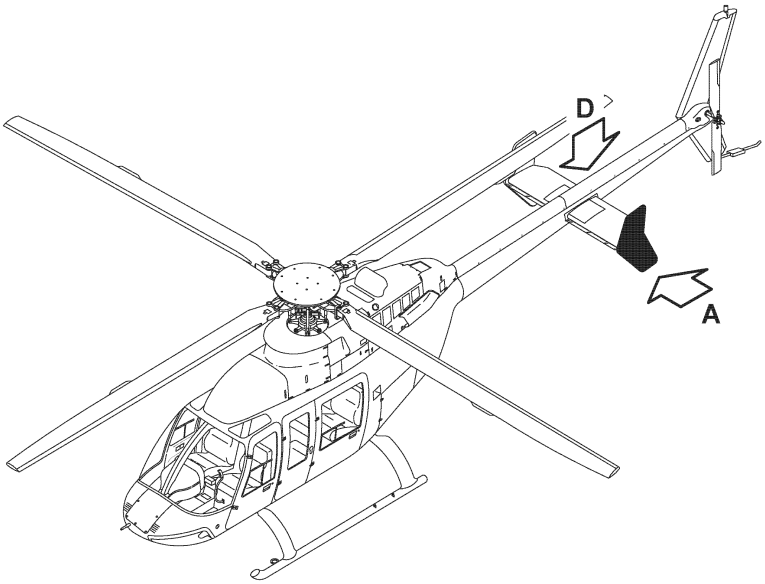

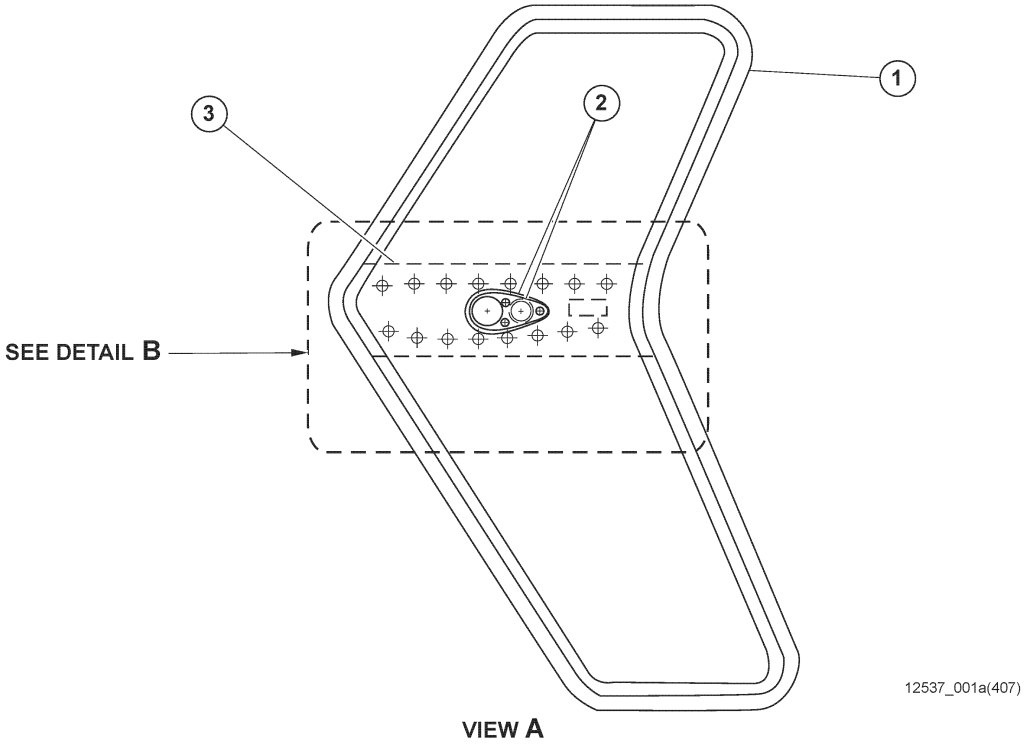

Figure 1: Auxiliary Fin modification (sheet 1 of 2)

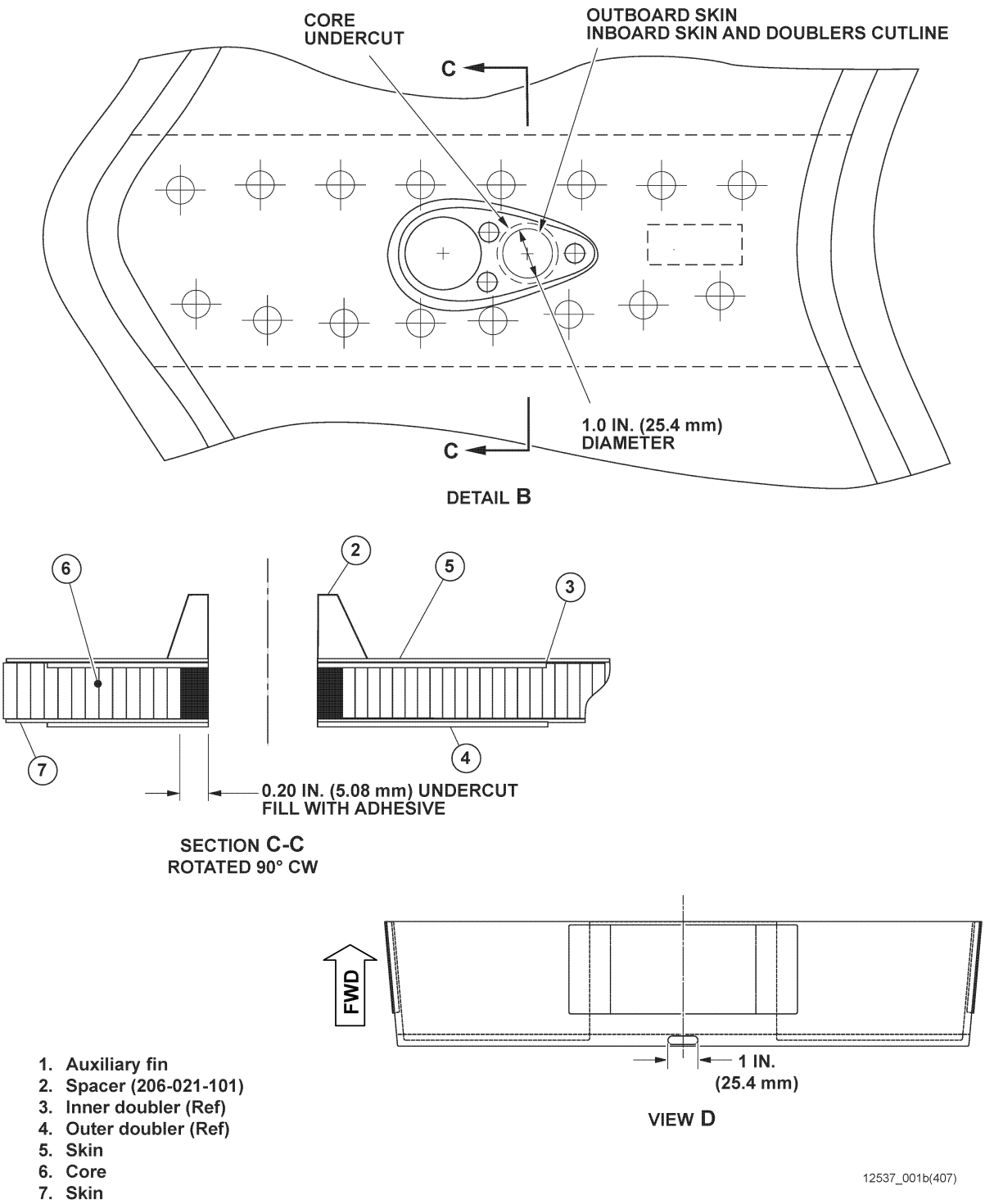

Figure 1: Auxiliary Fin modification (sheet 2 of 2)