A Textron Company

TECHNICAL BULLETIN 206L-18-255

28 June 2018

MODEL AFFECTED: **206L-1, 206L-3, and 206L-4**

SUBJECT: **COMPOSITE INLET COWLING, RETROFIT OF**

HELICOPTERS AFFECTED: **Serial numbers 45154 through 45790, 51001 through 51612 and 52001 through 52453.**

[Serial number 52454 and subsequent will have the intent of this bulletin accomplished prior to delivery.]

COMPLIANCE: At customer's option.

DESCRIPTION:

This bulletin provides instructions to install the 407-064-004-105 composite inlet cowling on helicopters originally equipped with the 206-064-819-001/-115/-139/-147 aluminum inlet cowling.
Applicability of this bulletin to any spare part shall be determined prior to its installation on an affected helicopter.

APPROVAL:

The engineering design aspects of this bulletin are Transport Canada Civil Aviation (TCCA) approved.

CONTACT INFO:

For any questions regarding this bulletin, please contact:

Bell Product Support Engineering - Light Helicopters
Tel: 450-437-2862 / 1-800-363-8023 / pselight@bellflight.com

MANPOWER:

Approximately 40 man-hours are required to complete this bulletin. This estimate is based on hands-on time and may vary with personnel and facilities available.

WARRANTY:

There is no warranty credit applicable for parts or labor associated with this bulletin.

MATERIAL:

Required Material:
The following material is required for the accomplishment of this bulletin and may be obtained through your Bell Supply Center.

Part Number	Nomenclature	Qty (Note)
407-704-034-103	**KIT, 206 Inlet Cowling consisting of:**	**1**
206-033-201-237	Support	2
206-033-201-335S	Former	1
206-033-201-336S	Former	1
407-064-004-105	Inlet cowling	1
206-064-802-115	Gusset	1
140-062-03-096	Safety wire-cres	96 inches
140-001-11	Washer	4
140-001-1	Washer	2
50-007A21C	Fastener, stud	10
50-007A30C	Fastener, stud	5
50-008RF2	Receptacle	6
50-009C2	Grommet	15
MS20426AD3-3	Rivet	12
MS20470AD3-3	Rivet	2
MS20470AD3-4	Rivet	12
MS20470AD3-5	Rivet	4
MS20470AD4-4-5	Rivet	4
MS20615-3M5	Rivet	4
MS20615-4MP4	Rivet	4
NAS9301B-4-02	Rivet	4
NAS9304B-4-02	Rivet	32
MS27039C1-10	Screw	8
MS27039C1-11	Screw	6
NAS1097AD3-4	Rivet	4
NAS1149E0316R	Washer	2
NAS1149E0363P	Washer	18
NAS1398CW3A2	Rivet	2
NAS1398CW3A3	Rivet	12

NAS1398CW3A4	Rivet	4
NAS9307M-4-02	Rivet	4
NAS9307M-4-05	Rivet	2
NAS6703HU3	Bolt	10
NAS6703HU5	Bolt	2
NAS6703HU6	Bolt	10
NAS6703HU9	Bolt	2

407-704-034-107	**KIT MOD BASIC SCREEN consisting of:**	**1(1)**
2000-00713-00	Tape 1 inch wide (299-947-110TYII) (C-454)	1 Roll
NAS1149E0332P	Washer	16
NAS6703L3	Bolt	14
NAS6703L4	Bolt	2

407-704-034-105	**KIT MOD PARTICLE SEP consisting of:**	**1(2)**
206-064-829-103	Discharge tube	1
206-064-829-104	Discharge tube	1
120-210-010H097	Shim	2
MS21072-3	Nut plate	2
MS27039C1-09	Screw	4
NAS1149D0332J	Washer	4
NAS1149E0332P	Washer	8
NAS1399CFA3A2	Rivet	8
NAS1775C3	Nut plate	4
NAS6703L5	Bolt	8
NAS6703L6	Bolt	8

NOTES:

1. If the helicopter is equipped with a basic screen, this kit may be ordered in addition to the 407-704-034-103 kit depending on the operator stock level.
2. If the helicopter is equipped with a particle separator, this kit may be ordered in addition to the 407-704-034-103 kit depending on the operator stock level.

Consumable Material:
The following material is required to accomplish this bulletin, but may not require ordering, depending on the operator's consumable material stock levels. This material may be obtained through your Bell Supply Center.

Part Number	Nomenclature	Qty (Note)	Reference *
407-704-034-121	**Kit consumable Consisting of:**	**1(1)**	
2010-05988-00	Sealant (MIL-PRF-81733)	2.5 OZ	C-251
2010-00193-00	Sealing compound (AMS-S-8802)	3.32 OZ	C-308
407-704-034-117	**Kit-consumable Consisting of:**	**1(2)**	
2000-01022-00	Adhesive (299-947-100,Ty II, CL2)	1 Pint	C-317
2000-11948-00	Adhesive (299-947-100,Ty II, CL 3)	50 grams	C-363
2000-00713-00	Tape 1" wide (299-947-110,TYII)	1 Roll	C-454
2010-00202-00	Fairing compound (299-947-072, TYI)	1 Pint	C-323
2010-06016-00	Potting compound (299-947-097, TYII)	1 Pint	C-584
2010-12792-01	Sealant (MIL-PRF-81733)	1 Pint	C-251
2230-00451-00	Epoxy primer (MIL-PRF-23377, Ty I, CL C1 or C2)	1 OZ	C-204
2650-06280-00	Glass cloth (AMS-C-9084, CL2, TYIII)	12"X12"	C-560
2100-00052-00	Chem film (MIL-DTL-81706)	1.35 OZ Pen	C-100
2600-09749-01	Cheesecloth	A/R(3)	C-486
TTI735	Isopropyl alcohol	A/R(3)	C-285

* C-XXX numbers refer to the consumables list in the BHT-ALL-SPM, Standard Practices Manual

NOTES:

1. If required, order this kit to complete the 407-704-034-105 particle separator mod.
2. If required, order this kit to complete the 407-704-034-103 inlet cowling installation.
3. These items are not part of any consumable kit and must therefore be ordered separately.

SPECIAL TOOLS:

None required.

WEIGHT AND BALANCE:

	Longitudinal		Lateral*	
Weight	**Arm**	**Moment**	**Arm**	**Moment**
-3.0 Lbs	139.8 in.	-419 in-Lbs	0.0 in.	0 in-Lbs
-1.1 kgs	3551 mm	-48.3 kg x mm/100	0 mm	0.0 kg x mm/100

* In lateral calculations, - is left and + is right.

ELECTRICAL LOAD DATA:

Not affected.

REFERENCES:

BHT-206L-SERIES-IPB, Illustrated Parts Breakdown
BHT-206L1-MM, Maintenance Manual
BHT-206L3-MM, Maintenance Manual
BHT-206L4-MM, Maintenance Manual
BHT-206-SI-2038, BHT-206-SI-2048 Service Instructions
BHT-ALL-SRM, Structural Repair Manual
BHT-ALL-SPM, Standard Practices Manual

PUBLICATIONS AFFECTED:

BHT-206L-SERIES-IPB, Illustrated Parts Breakdown, Chapter 71
BHT-206L1-MM, Maintenance Manual, Chapter 71
BHT-206L3-MM, Maintenance Manual, Chapter 71
BHT-206L4-MM, Maintenance Manual, Chapter 71

ACCOMPLISHMENT INSTRUCTIONS:

1. Prepare the helicopter for maintenance.

2. Open the forward fairing (1, View A). (Refer to the applicable Maintenance Manual, Chapter 71).

3. Remove the fuel filter assembly 222-366-621-003/-101/-103. (Refer to the applicable Maintenance Manual, Chapter 28).

4. Remove the transmission fairing (2), the engine cowling (3) and inlet cowling (4). (Refer to the applicable Maintenance Manual, Chapter 53).

CAUTION

Upon removal of the inlet cowling (4), make sure to cover the engine intake (5, Detail B) to prevent Foreign Object Damage.

5. Cover the engine intake (5).

6. Remove the induction screen (6) or the particle separator (7) as applicable, from the inlet cowling (4) and retain. (Refer to the applicable maintenance manual, Chapter 71). Discard the inlet cowling (4).

7. Replace the formers (8, Detail E) as follows:

CAUTION

Care must be taken to avoid damaging the roof panel when removing the rivets that secure the existing formers (8) to the roof.

a. Use a plastic scraper to remove the sealant around the existing formers (8).

b. Use a fine tipped non-corrosive ink marker or equivalent to mark the existing formers (8) position (footprint) on the roof.

c. Carefully remove and discard the existing formers (8).

d. Clean the area and locate the new formers (8) on the roof in the footprint outlined in step 7.b.

-NOTE-

The bottom flange of the new formers (8) is approximately 0.150 inch (3.81 mm) wider than the original part. Make sure to align the new formers (8) with the outside mold line of the footprint outlined in step 7.b.

e. Temporarily secure the new formers (8) in place using tape or other suitable means.

f. Use a hole finder to mark the rivet hole positions on the new formers (8) and make sure that there is 2D edge distance minimum. Refer to the Note 8, page 19 for alternate installation method.

g. Drill rivet holes. Refer to the Section F-F for rivet type and location.

h. If required, trim the formers (8) to free access to the drain holes located at STA 149.00. Ensure to maintain minimum 1.5D edge distance from the fastener centerline common to the former closest to the trim line.

i. Install one support 206-033-201-237 (37, Section F-F) inside of each former (8) using two NAS1097AD3-4 rivets (38, Detail E). Supports and rivets are to be installed wet with adhesive (C-317).

j. Deburr the holes. Chemical film treat (C-100), prime (C-204), and paint as required (BHT-ALL-SPM).

k. Install the new formers (8, Detail E) with the rivets provided. Refer to the Section F-F for rivet type and location. All rivets and formers (8) to be installed wet with sealant (C-251).

l. Seal all edges of each former (8) with sealant (C-251).

8. Prepare the new 407-064-004-105 inlet cowling (4, View A) as follows:

-NOTE-

For the particle separator installation, refer to the BHT-206-SI-2038, Paragraph 1-10. For the induction screen installation, refer to the BHT-206-SI-2048.
.

a. Install the induction screen (6, Detail B) (BHT-206-SI-2048) or the particle separator (7) (BHT-206-SI-2038).

b. Install five bolts (26, Detail H) with washers (27) on each side.

c. Install one bolt (28) with washer (29) on each side.

d. Install three safety wires on each side to lock the bolts installed in the previous steps 8.b. and 8.c. (Detail H).

e. Install three screws (30, View K) with washers (31) on each side.

f. Position the new inlet cowling (4, View A) on the helicopter and install the bolts (21, Detail C) and the washers (22) to secure the aft edge of the induction screen (6, Detail B) or the particle separator (7) as applicable, to the forward firewall (23, Detail C). Tighten the bolts (21) and make sure that the inlet cowling is properly positioned.

g. Mark and open one 0.238 to 0.244 inch (6.05 to 6.20 mm) diameter hole on each side of the new inlet cowling (4, View A) at approximately STA 150.43 and WL 86.150. Hole positions to be located from the firewall. (Detail H).

9. Prepare the 206-064-802-001 transmission fairing (2, View A) as follows:

a. Remove and discard the five existing studs on each side and replace by new studs 50-007A21C (18, Detail H) using 50-009C2 grommets (39).

b. Remove and discard the left gusset 206-064-802-029 (32, View M).

c. Remove and retain both ejector blades and stud assemblies (36 Section I-I) located on top of transmission fairing (2, View A) at LBL 11.50 and RBL 11.50.

d. Perform an approximate 24.60 inches (624.8mm) diameter cut out on the transmission fairing (2) as shown on Section I-I. Refer to the Note 12, page 19 for details.

e. Undercut core 0.200 inch (5.08mm) along cut out and fill cavity with potting compound (C-584) (Section L-L).

f. Seal edge of filled core (cured potting compound) with sealant (C-251) (Section L-L).

g. Position the 206-064-802-001 transmission fairing (2, View A) on the helicopter and fasten both sides to the inlet cowling (4).

h. Mark and open two 0.248 to 0.253 inch (6.30 to 6.43 mm) diameter holes through top of transmission fairing at approximately LBL 14.18 and RBL 12.58. Hole positions to be located from inlet cowling (4) (Note 5, Section I-I).

i. Temporarily install the two ejector blades and stud assemblies (36, Section I-I) (fasten the studs through the holes opened at above step 9.h.) and mark the ejector blade rivet location on the transmission fairing (2).

j. Repair the two indicated holes (Note 1, View M) used to secure the top face of left gusset AND the area where the left ejector blade will be riveted (Note 3, Section I-I) as follows:

(1) Remove paint and surfacing film using 100 grit or finer abrasive paper over an area large enough to cover the repair and prepare indicated holes and immediate surroundings for bonding.

(2) Remove outer skin to expose the core.

(3) Fill holes and cavities with adhesive (C-317) and cure (BHT-ALL-SRM Table 3-25).

(4) After cure, sand smooth to contour of surrounding area.

(5) Prepare repair surface for bonding (BHT-ALL-SRM 4-2-9).

(6) Repair patch should be as follows on inner surface to cover holes:

(a) P1: Ply of fiberglass per AMS-C-9084 CL2 TY III(C-560), orientation optional.

(7) Repair patch should be as follows on outer surface to cover holes and filled core:

(a) P2 and P3: Ply of fiberglass per AMS-C-9084 CL2 TY III(C-560), orientation optional.

(b) Plies shall extend 0.50 inch (12.7mm) minimum beyond filled area or up to edge of part. Plies overlap to be 0.50 inch (12.7mm) minimum.

(8) Wet plies using adhesive (C-363).

(9) Vacuum bag and cure at room temperature for 24 hours while applying a minimum of 25.0 inches Hg vacuum. (BHT-ALL-SRM Table 4-10). For alternate high temperature cure, refer to the Table 4-12 (BHT-ALL-SRM).

(10) Inspect for voids and unbonded area(s). Voids shall not exceed 10% of the total bonded area. No one void shall exceed 0.25 square inch (1.61 cm^2) in area.

(11) As required, fill and fair with fairing compound (C-323) and sand to contour.

k. Install new gusset 206-064-802-115 (33, View M) as follows: Locate top face hole positions of gusset after clamping bottom face of gusset. Install using MS20470AD3-4 rivets (34). Gusset and rivets to be installed wet with sealant (C-251). Refer to the View M for details.

I. Repair the right side of the transmission fairing where the right ejector blade will be riveted (Note 4, Section I-I) as follows:

(1) Remove the five rivets (35, Section I-I) used to secure the top face of the right gusset.

(2) Remove paint and surfacing film using 100 grit or finer abrasive paper over an area large enough to cover the repair.

(3) Remove outer skin to expose the core.

(4) Fill core cavities using adhesive (C-317) and cure. (BHT-ALL-SRM Table 3-25).

(5) After cure, sand smooth to contour of surrounding area.

(6) Prepare repair surface for bonding (BHT-ALL-SRM 4-2-9).

(7) Repair patch should be as follows on outer surface to cover holes and filled core:

(a) P1 and P2: Ply of fiberglass per AMS-C-9084 CL2 TY III (C-560), orientation optional.

(b) Plies shall extend 0.50 inch (12.7mm) minimum beyond filled area or up to edge of part. Plies overlap to be 0.50 inch (12.7mm) minimum.

(8) Wet plies using adhesive (C-363).

(9) Vacuum bag and cure at room temperature for 24 hours while applying a minimum of 25.0 inches Hg vacuum. (BHT-ALL-SRM Table 4-10). For alternate high temperature cure, refer to the Table 4-12 (BHT-ALL-SRM).

(10) Inspect for voids and unbonded area(s). Voids shall not exceed 10% of the total bonded area. No one void shall exceed 0.25 square inch (1.61 cm^2) in area.

(11) As required, fill and fair with fairing compound (C-323) and sand to contour.

(12) Reinstall the five rivets (35, Section I-I) used to secure the top face of the right gusset.

(13) Refinish as required.

(14) Install the two ejector blades and stud assemblies (36, Section I-I) using rivets MS20470AD3-5 and washers 140-001-11 on each rivet tail.

m. Install anti-chaffing tape (C-454) along inner faying surface of transmission fairing that comes into contact with other parts of this assembly. It is permissible to butt joint tape but no gaps are allowed.

n. Prepare surface to receive tape (C-454) as follows: Solvent clean bonding surface with cheesecloth (C-486) dampened with Isopropyl Alcohol (C-285). Dry with a clean cheesecloth and allow to air dry for 10-15 minutes before applying tape (C-454). Apply tape (C-454) with a squeegee or a roller using firm pressure.

o. Re-identify the transmission fairing (2, View A) as 206-064-802-105FM.

p. Position the 206-064-802-105FM transmission fairing (2) on the helicopter and fasten both sides to the inlet cowling (4).

10. Prepare the 206-064-804 engine cowling (3) as follows:

a. Remove and discard the five existing studs along the forward edge and install five 50-007A30C studs (19, View D) using 50-009C2 grommets (39).

b. Install anti-chafing tape (C-454) along the inner faying surface of the engine cowling (3, View A) that comes into contact with other parts of this assembly. It is permissible to butt joint tape (C-454), but no gaps are allowed.

c. Prepare surface to receive tape (C-454) as follows: Solvent clean bonding surface with a cheesecloth (C-486) dampened with isopropyl alcohol (C-285). Dry with a clean cheesecloth and allow to air dry for 10-15 minutes before applying tape (C-454). Apply tape (C-454) with a squeegee or a roller using firm pressure. Tape (C-454) length to be 36.0 inches (914 mm) using two strips wide to obtain a total of 2.0 inches (51 mm) wide.

d. Position the engine cowling (3) on the helicopter and fasten all studs.

11. Close the forward fairing (1).

12. Make sure all the cowlings/fairings are aligned correctly. (Note 9, Figure 1 sheet 7 of 7).

13. Mark hole positions in the new formers as follows: With a fine tipped non-corrosive ink marker or equivalent, draw three circles on each of the new formers (8, Detail E). Circles to be located from the transmission fairing (2, View A) at approximately STA 99.17, 110.30, and 121.70, WL 72.43 (Detail E).

14. Draw two circles on each of the new formers (8, Detail E). Circles to be located from the 407-064-004-105 air induction cowling (4, View A) at approximately STA 124.01 and 129.34 and WL 72.51(Detail E).

15. Open the forward fairing (1, View A) and remove the engine cowling (3), transmission fairing (2), and inlet cowling (4).

16. Make sure that there is sufficient edge distance at all marked locations.

-NOTE-

Chemical film treat (C-100), prime (C204), and paint all drilled parts as required (BHT-ALL-SPM).

17. Open three 0.325 to 0.335 inch (8.26 to 8.51 mm) holes in each of the new formers (8, Detail E) at approximately STA 99.17 and 110.30, and 121.70 where located in step 13.

18. Install three receptacles 50-008RF2 using MS20426AD3-3 rivets (9 and 10) on each new former (8). Countersink for rivets as required.

19. Open one 0.203 to 0.208 inch (5.16 to 5.28 mm) hole in each of the new formers (8) at approximately STA 124.01 and one 0.238 to 0.244 inch (6.04 to 6.20 mm) hole in each of the new formers at approximately STA 129.34 where located at step 14.

20. Install anti-chafing tape (C-454) (20) on each of the new formers (8) between STA 122.37 and 130.0.

21. Prepare the surface to receive tape (C-454) as follows: Solvent clean bonding surface with a cheesecloth (C-486) dampened with isopropyl alcohol (C-285). Dry with a clean cheesecloth and allow to air dry for 10-15 minutes before applying tape (C-454). Apply tape (C-454) with a squeegee or a roller using firm pressure.

22. Carefully trim the anti-chafing tape (C-454) to the contour of the formers (8) including hardware holes.

23. Clean the entire area and remove the engine intake cover (5, Detail B).

24. Install the inlet cowling (4, View A), the engine cowling (3) and transmission fairing (2). (Refer to the applicable Maintenance Manual, Chapter 53).

25. Install the fuel filter assembly 222-366-621-003/-101/-103. (Refer to the applicable maintenance manual, Chapter 28).

26. Close the forward fairing (1). (Refer to the applicable maintenance manual, Chapter 71).

27. Make an entry in the helicopter logbook and historical service records indicating compliance with this Technical Bulletin.

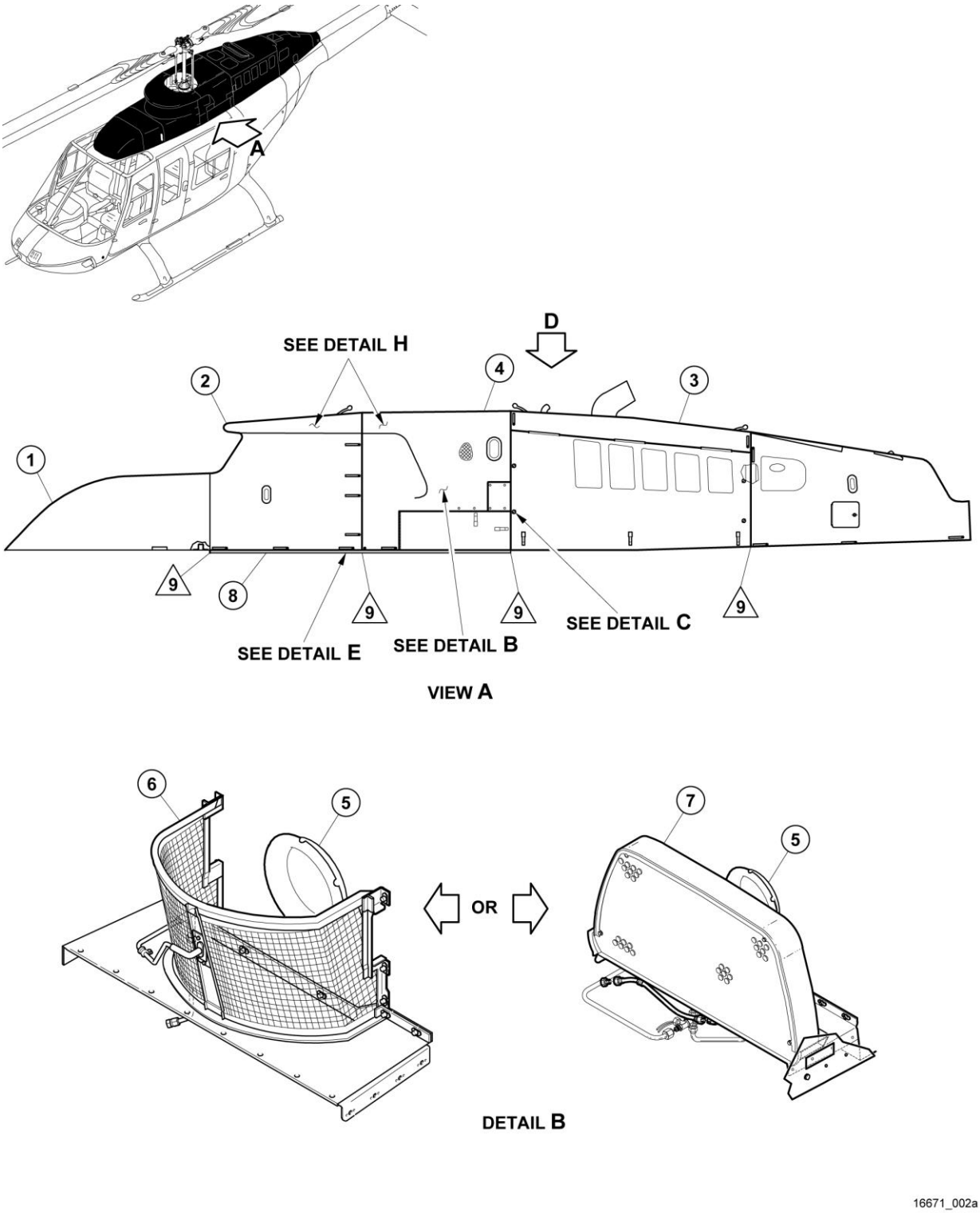

Figure 1(sheet 1 of 7)

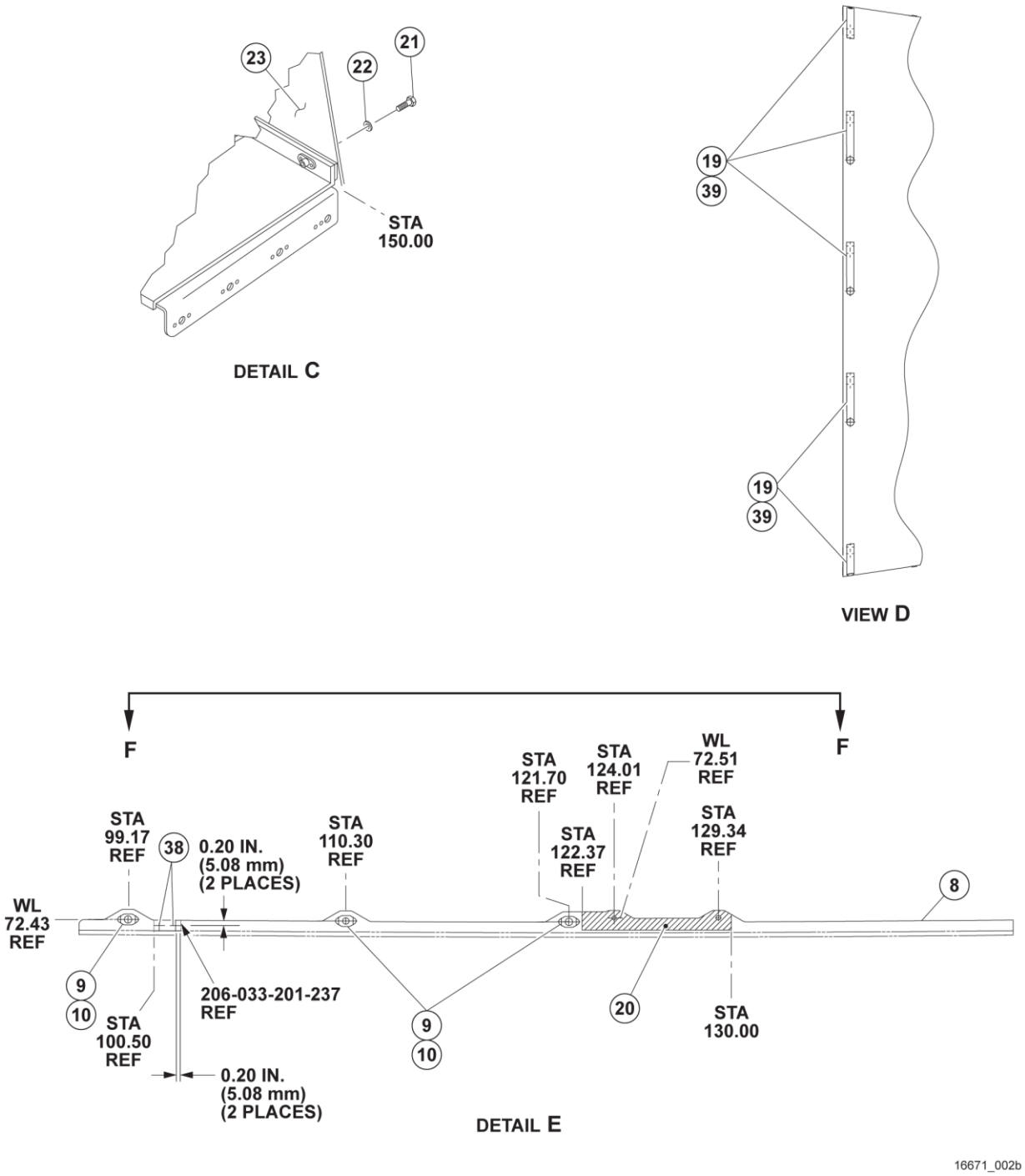

Figure1 (Sheet 2 of 7)

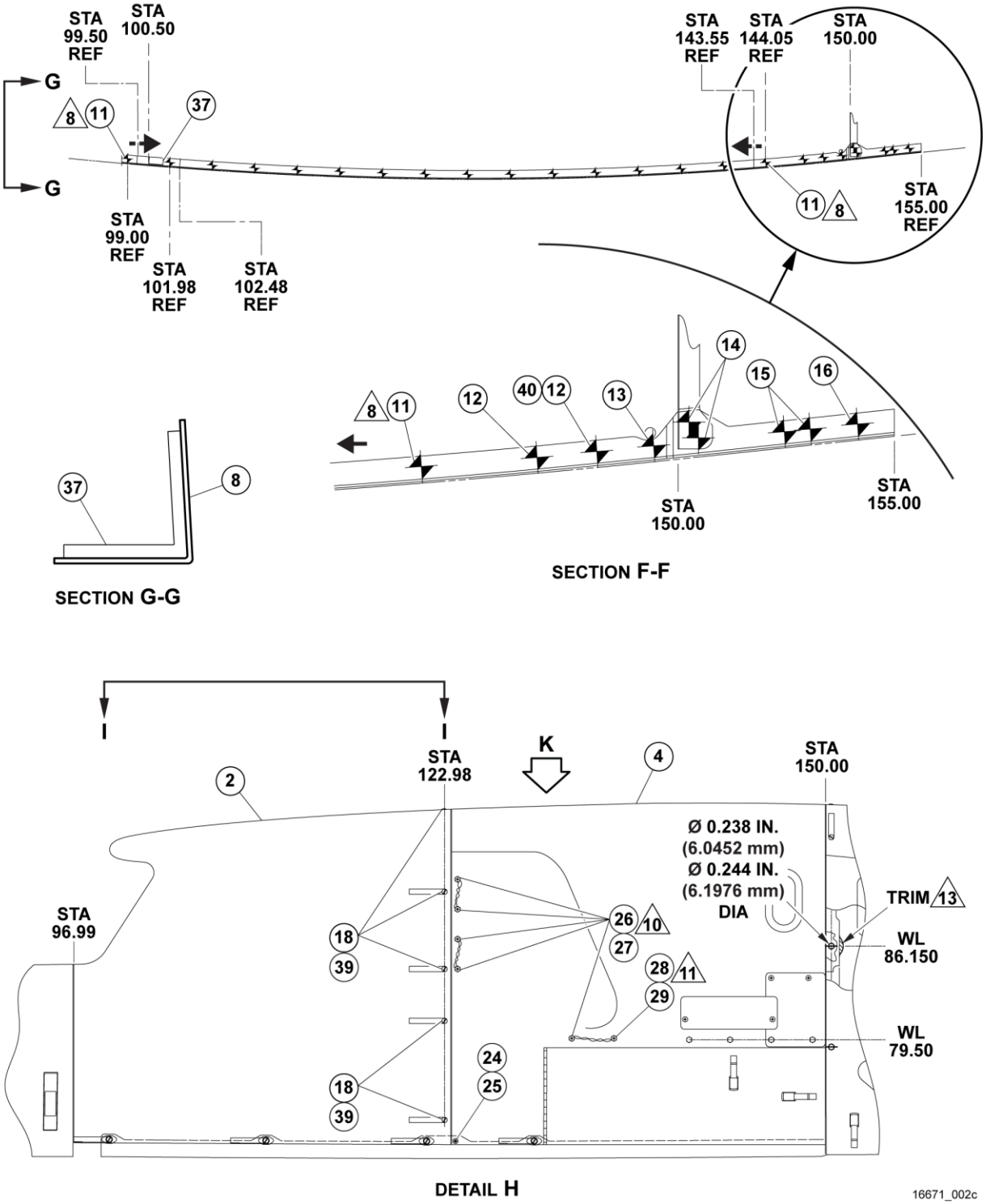

Figure 1(Sheet 3 of 7)

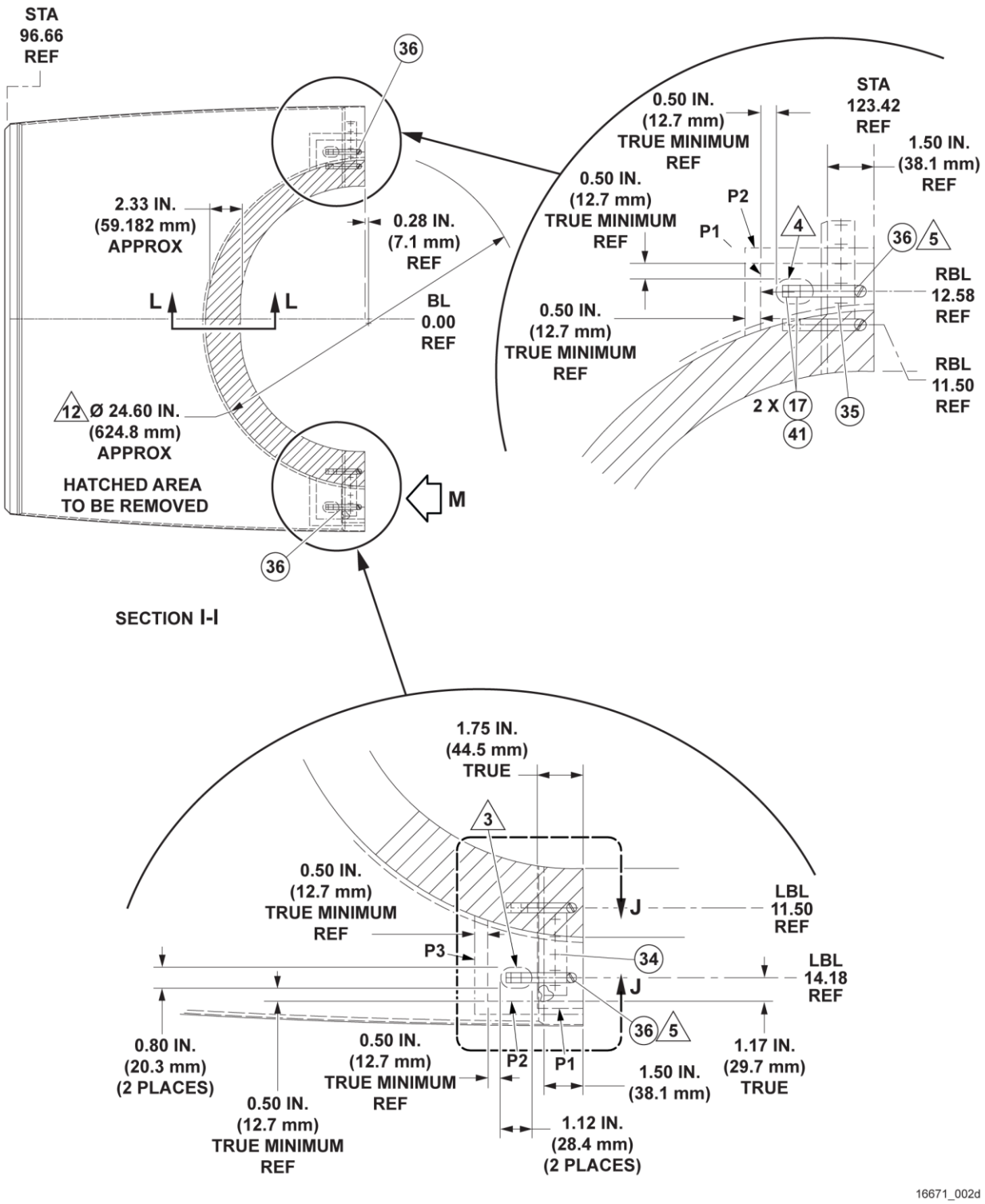

Figure 1(Sheet 4 of 7)

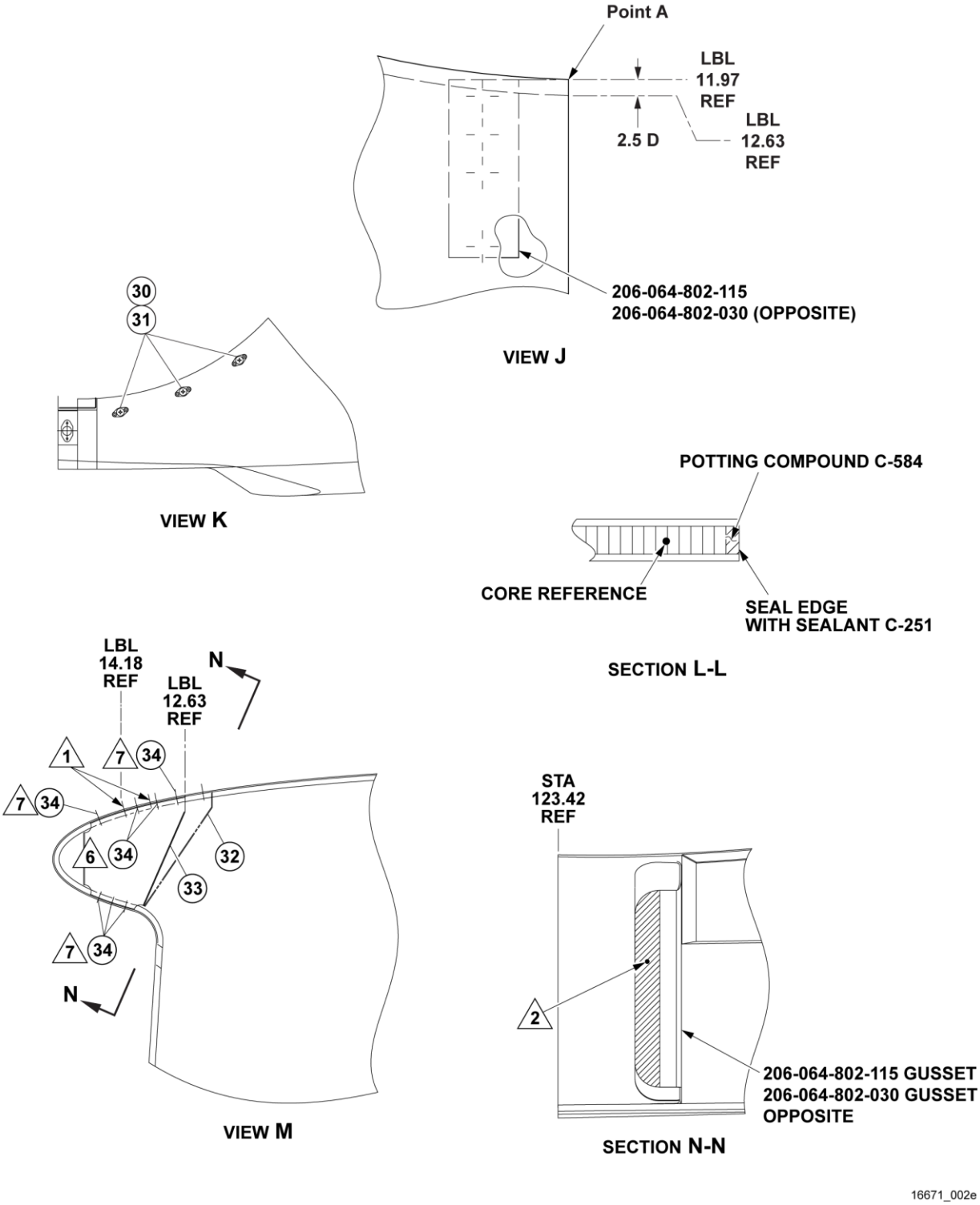

Figure 1(Sheet 5 of 7)

1. Forward fairing
2. Transmission fairing
3. Engine cowling
4. Inlet cowling
5. Engine intake
6. Induction screen
7. Particle separator
8. Former (206-033-201-335S/-336S)
9. Receptacles (50-008RF2) Qty 6
10. Rivet (MS20426AD3-3) Qty 12
11. Rivet (NAS9304B-4-02) Qty 32
12. Rivet (MS20470AD4-4-5, Alt NAS9301B-4-02) Qty 4
13. Rivet (MS20470AD3-3, Alt NAS1398CW3A2) Qty 2
14. Rivet (MS20615-3MP5, Alt NAS1398CW3A4) Qty 4
15. Rivet (MS20615-4MP4, Alt NAS9307M-4-02) Qty 4
16. Rivet (MS20615-4MP7, Alt NAS9307M-4-05) Qty 2
17. Rivet (MS20470AD3-5) Qty 4
18. Stud (50-007A21C) Qty 10
19. Stud (50-007A30C) Qty 5
20. Anti-chaffing tape
21. Bolt
22. Washer
23. Forward firewall
24. Screw (MS27039C1-10) Qty 2
25. Washer (NAS1149E0316R) Qty 2
26. Bolt (NAS6703HU3) Qty 10
27. Washer (NAS1149E0363P) Qty 10
28. Bolt (NAS6703HU5) Qty 2
29. Washer (NAS1149E0363P) Qty 2
30. Screw (MS27039C1-10) Qty 6
31. Washer (NAS1149E0363P) Qty 6
32. Gusset (206-064-802-029) Ref
33. Gusset (206-064-802-115) Qty 1
34. Rivet (MS20470AD3-4, Alt NAS1398CW3A3) Qty 7
35. Rivet (MS20470AD3-4, Alt NAS1398CW3A3) Qty 5
36. Ejector blade and stud assembly
37. Supports (206-033-201-237) Qty 2
38. Rivets (NAS1097AD3-4) Qty 4
39. Grommet (50-009C2) Qty 15
40. Washer (140-001-1) Qty 2
41. Washer (140-001-11) Qty 4
42. Bolt (NAS6703HU6) Qty 10 10
43. Bolt (NAS6703HU9) Qty 2 11

16671_002f

Figure 1(Sheet 6 of 7)

NOTES

1. Repair indicated holes per step 9J (1-11).

2. If required, it is permissible to trim the indicated flange of 206-064-802-115/-030 gusset on LH and RH side to ensure a minimal gap of 0.060 inch (1.52 mm) with 407-064-004 cowl assembly-air inlet. Minimum flange width to be 0.26 inch (6.6 mm) after trim. Blend trimmed flange to ensure a smooth transition with adjacent surfaces with minimum radii of 0.25 inch (6.3 mm). Refinish as required.

3. Repair indicated area per step 9J (1-11).

4. Repair indicated area per step 9L (1-12).

5. 0.248 to 0.253 inch (6.30 to 6.43 mm) diameter holes.

6. Transfer holes from gusset.

7. Transfer holes from fairing.

8. It is permissible to inter-pitch indicated fasteners as follows:
(1) Drill out rivet head and push the trapped rivet tail in the core and fill holes using adhesive C-317.
(2) Relocate rivets from STA 99.00 and STA 144.05 to STA 99.50 and STA 143.55 respectively to maintain a minimum pitch of 0.50 inch (12.7 mm) with previous hole. Rivet edge distance to be 0.25 inch (6.3 mm) minimum.
(3) All other rivets located inbetween are to be equally spaced between each existing hole in the roof structure. Rivet edge distance to be 0.25 inch (6.3 mm) minumum.

9. Gap between cowls and gap between cowls and airframe structure to be 0.060 inch (1.52 mm) minmum and 0.200 inch (5.08 mm) maximum and shall not vary more than 0.030 inch (0.76 mm) within 10 inches (254 mm).

10. If snow deflectors are installed use NAS6703HU6 instead of NAS6703HU3 at those locations.

11. If snow deflectors are installed use NAS6703HU9 instead of NAS6703HU5 at that location.

12. Diameter of trim is defined by the distance between 'Point A' on both sides. Offset trim diameter by 0.28 inch (7.1 mm) as shown to obtain trim circle center point. Define 'Point A' as the intersection between the cowling aft edge (in station) and the line (in butt line) measured from a true distance of 2.5D from the most inboard fastener common to 206-064-802-115/-030 gussets.

13. Trim the inlet cowling where shown to clear the engine door while maintaining an edge distance of 0.575 inch (14.60 mm).

16671_002g

Figure 1(Sheet 7 of 7)