Bell Helicopter
A Textron Company

ALERT SERVICE BULLETIN 505-17-05
8 December 2017

MODEL AFFECTED: **505**

SUBJECT: **MAIN ROTOR RIGGING, VALIDATION OF**

HELICOPTERS AFFECTED: **Serial numbers 65011 through 65013, 65015 through 65023, 65025, 65030 and 65031**

[Serial number 65014, 65024, 65026 through 65029, and 65032 and subsequent will have the intent of this bulletin accomplished prior to delivery.]

COMPLIANCE: No later than September 30, 2018

DESCRIPTION:

Bell Helicopter has discovered that the final steps utilized in the production rigging procedure that connects the boosted links to the swashplate assembly may not be optimal. For those helicopters affected, a validation procedure has been developed in the interim to a revision of the BHT-505-MM Maintenance Manual that will introduce the revised procedure.

The validation procedure detailed in this Alert Service Bulletin (ASB) requires special tooling and Bell trained personal on site to assist to complete the work. Bell Helicopter is taking responsibility to organize and dispatch a team to help validate the main rotor rigging on affected helicopters.

The present rigging procedures (DMC-505-A-67-12-00-00A-271A-A) and (DMC-505-A-67-11-00-00A-271A-A) as currently published in the BHT-505-MM Maintenance Manual are not to be utilized until they are revised. Until such a revision is released, if rigging on a helicopter is required, contact Product Support Engineering to determine steps to proceed.

Upon receipt of this bulletin, contact your regional Customer Support Engineer (CSE) to begin coordinating the efforts of this ASB. To find contact points of a CSE go to this website link: http://www.bellhelicopter.com/support-and-service/support/css-directory/customer-service-engineers

Applicability of this bulletin to any spare part shall be determined prior to its installation on an affected helicopter.

APPROVAL:

The engineering design aspects of this bulletin are Transport Canada Civil Aviation (TCCA) approved.

CONTACT INFO:

For any questions regarding this bulletin, please contact:

Bell Helicopter Product Support Engineering - Light Helicopters
Tel: 450-437-2862 / 1-800-363-8023 / pselight@bh.com

MANPOWER:

Approximately 8 man-hours are required to complete this bulletin. This estimate is based on hands-on time and may vary with personnel and facilities available.

WARRANTY:

There is no warranty credit applicable for parts or labor associated with this bulletin.

MATERIAL:

Required Material:
The following material is required for the accomplishment of this bulletin and may be obtained through your Bell Helicopter Textron Supply Center.

Part Number	Nomenclature	Qty
MS24665-155	Cotter Pin	AR

Consumable Material:
The following material is required to accomplish this bulletin, but may not require ordering, depending on the operator's consumable material stock levels. This material may be obtained through your Bell Helicopter Textron Supply Center.

Part Number	Nomenclature	Qty (Note)	Reference *
2400-00066-00	Hydraulic Fluid	AR	C-072
Commercially available	Double sided tape	AR	N/A
Commercially available	Lockwire	AR	C-447

* C-XXX numbers refer to the consumables list in the BHT-ALL-SPM, Standard Practices Manual

SPECIAL TOOLS:

Part Number	Nomenclature	Qty (Note)
Commercially available	Mitutoyo Digital Protractor Model Pro 3600 or Pro 360	4 (1)
505SK409-101	Mast Zero Tool	1 (1)
505SK409-102	Swash Plate Angle Measurement Tool	1 (1)
505SK409-103	Protractor Bracket (optional)	1 (1)
505SK409-104	Protractor Bracket (optional)	1 (1)

NOTE 1: Will be brought by Bell Helicopter trained personnel during their visit at facilities to accomplish this bulletin.

WEIGHT AND BALANCE:

Not affected.

ELECTRICAL LOAD DATA:

Not affected.

REFERENCES:

BHT-505-IPB Illustrated Parts Breakdown
BHT-505-MM Maintenance Manual
Bell document SLS-947-033 Hydraulic test plan (Bell Proprietary)
Bell document SLS-401-001 Clearance limits (Bell Proprietary)

PUBLICATIONS AFFECTED:

BHT-505-MM Maintenance Manual, Chapter 67

ACCOMPLISHMENT INSTRUCTIONS:

WARNING

Any attempt to accomplish this bulletin without the required-on site Bell Helicopter personnel guided assistance and without the required special tooling called out, will lead to erroneous aircraft rigging adjustments.

1. Prepare the helicopter for maintenance.

2. Turn main rotor head so that the drive lever assembly is aft and the blades are aligned with butt line zero of aircraft.

3. Place a jack at the aft jacking point to stabilize the helicopter (Figure 1).

4. Remove transmission fairings 432BR and 432AL. (DMC-505-A-53-40-02-00A-520A-A and DMC-505-A-53-40-01-00A-520A-A). Optionally, upper-left mid-fuselage access panel 433BR (DMC-505-A-53-40-04-00A-520A-A) and 433AL (DMC-505-A-53-40-03-00A-520A-A) may be removed.

5. Remove pilot cyclic boot cover from cyclic base fitting. Remove cyclic bolt (1, Figure 2) and washer (2).

6. Position digital protractors (1, Figure 3) perpendicularly on top of the cyclic support using double sided tape. As an alternate to the double sided tape, you may install protractor brackets 505SK409-103 and 505SK409-104 to support the digital protractors.

    a. in the helicopter, fore and aft axis.

    b. in the helicopter, lateral axis.

7. Install hydraulic power support equipment to the helicopter (DMC-505-A-29-00-00-00A-722A-A or Bell document SLS-947-033 Hydraulic test plan). Apply hydraulic power.

8. Using the digital protractors measure the full lateral and longitudinal travel of the pilot cyclic stick. Position pilot cyclic stick in the centered position. (mid longitudinal and mid lateral travel). Using the cyclic friction knob, increase friction to keep pilot cyclic stick in the mid position.

9. Position the pilot collective stick in the full down position. Tighten collective friction knob to keep the pilot collective stick in this position.

10. Measure collective lever position dimension. Collective lever (1) should be at 2.25 inches ± 0.03 inch (57.15 mm ± 0.762 mm) (Figure 4).

    a. If collective lever is within allowable limits go to step 10.c.

    b. If the collective lever is not within allowable limit, record dimension of collective lever position value in Table 1. Adjust rod M207-20M485-041 (Figure 5) to obtain the required dimension of 2.25 inches ± 0.03 inch (57.15 mm ± 0.762 mm) (Figure 4).

        i. Disconnect rod end fork (1, figure 5) from collective lever (2). Retain hardware for re-installation at a later step.

        ii. Loosen jam nut (3) and adjust rod end fork (1) as required to obtain required dimensions.

iii. Torque jam nut (3) 70 to 90 inch-pounds (8.0 to 10.1 Nm).

iv. Connect the rod end fork (1) to the collective lever (2).

-NOTE-

If 20-057-XX bolt is found installed in lieu of NAS6605-XX, torque nut 100 to 140 inch-pounds (11.3 to 15.8 Nm). Part number identified on bolt head.

v. Torque hardware 60 to 85 inch-pounds (6.8 to 9.6 Nm) and secure with cotter pin (DMC-505-A-67-11-17-00A-720A-A).

c. Record collective lever position value in Table 1.

11. Remove the lock wire on the swashplate dust boot for access. Remove the two forward bolts (1, Figure 6) and lock wire from the swashplate outer ring. Install rigging tool 505SK409-102 (2). Confirm the tool is properly positioned against the inner ring and that the tool centerline is aligned with the grease nipple (3) on the outer ring.

12. Install the zeroing tool 505SK409-101 (1, Figure 7) on the main rotor mast and confirm that the left and right alignment marks are aligned with the collar set swashplate drive assembly (Figure 8).

13. Make sure collective stick is in the full down position with collective friction set to maximum to hold stick in position as adjusted in step 9.

14. Place the pilot cyclic stick full aft and centered laterally using the digital protractors. Lock the pilot cyclic stick in place using the cyclic friction knob.

-NOTE-

Pay particular attention not to move or lean on the helicopter during the step below.

15. Using two digital protractors on the 505SK409-101 zeroing tool, measure the right and left hand zero positions on the mast. The digital protractors should be perpendicular to the mast, which is verified by taking the zero with the protractor against the mast.

16. Place the left and right hand protractors onto the rigging tool 505SK409-102 against the alignment L-bracket (Figure 9). The left hand protractor reading should be 9.0 ± 0.4 degrees (target 9.0) and the right had protractor reading should be 6.8 ± 0.4 degrees (target 6.8).

a. If readings are within allowable limits go to step 16.c.

b. If the readings are not within allowable limits, record values of left hand and right hand protractors in Table 1. Adjust the right and/or left hand boosted control tube M207-20M213-041 to obtain the target measurements (Figure 10).

i. Disconnect control tube (1) from swashplate inner ring (3). Retain hardware for re-installation at a later step.

ii. Loosen jam nut (2) and adjust control tube to obtain required measurements.

iii. Torque jam nut (2) 95 to 110 inch-pounds (10.8 to 12.4 Nm).

iv. Install control tube (1) to swashplate inner ring (3) using hardware removed in previous step.

-NOTE-

If 20-057-XX bolt is found installed in lieu of NAS6605-XX, torque nut 100 to 140 inch-pounds (11.3 to 15.8 Nm). Part number identified on bolt head.

v. Torque hardware 60 to 85 inch-pounds (6.8 to 9.6 Nm) and secure with cotter pin (DMC-505-A-67-12-20-00A-720A-A, DMC-505-A-67-12-21-00A-720A-A).

c. Record values of left hand and right hand protractors in Table 1.

17. Repeat steps 8 through 16 until all rigging dimensions are within allowable tolerances.

18. Remove main rotor rigging tools 505SK409-101 and 505SK409-102. Install swashplate hardware removed in step 11 and torque 50 to 70 inch-pounds (5.7 to 8.0 Nm) then secure with lockwire. Install swashplate boot (DMC-505-A-62-30-00-01A-720A-A)

19. Remove double sided tape or 505SK409-103 and 505SK409-104 protractor brackets as installed in step 6. Install cyclic bolt and washer removed in step 5, torque 30 to 40 inch-pounds (3.4 to 4.5 Nm) (DMC-505-A-67-12-02-00A-720A-A). Install pilot cyclic stick boot cover to pilot cyclic stick base fitting.

20. Confirm that all the boosted controls and swashplate minimum clearances are respected ensuring no fouling or binding is possible (Bell document SLS-401-001).

21. Remove hydraulic power support equipment from the helicopter (DMC-505-A-29-00-00-00A-522A-A or Bell document SLS-947-033 Hydraulic test plan).

22. Fill with hydraulic fluid (C-072) as required (DMC-505-A-12-10-02-00A-369A-A hydraulic system fluid level check).

23. If removed, install upper-left mid-fuselage access panel 433BR (DMC-505-A-53-40-04-00A-720A-A) and 433AL (DMC-505-A-53-40-03-00A-720A-A). Install transmission fairings 432BR and 432AL. (DMC-505-A-53-40-02-00A-720A-A and DMC-505-A-53-40-01-00A-720A-A).

24. For tracking purposes, provide the numbers recorded in the Table 1 to Product Support Engineering at pselight@bh.com .

25. Make an entry in the helicopter logbook and historical service records indicating compliance with this Alert Service Bulletin.

HELICOPTER SERIAL NUMBER		DATE	

PARAMETER	VALUE
Collective Lever (**step 10.b.**)	
Collective Lever (**step 10.c.**)	
Left Hand Protractor (**step 16.b.**)	
Right Hand Protractor (**step 16.b.**)	
Left Hand Protractor (**step 16.c.**)	
Right Hand Protractor (**step 16.c.**)	

Table 1 – Rigging Measurement Record

Figure 1 – Typical Jack Installation

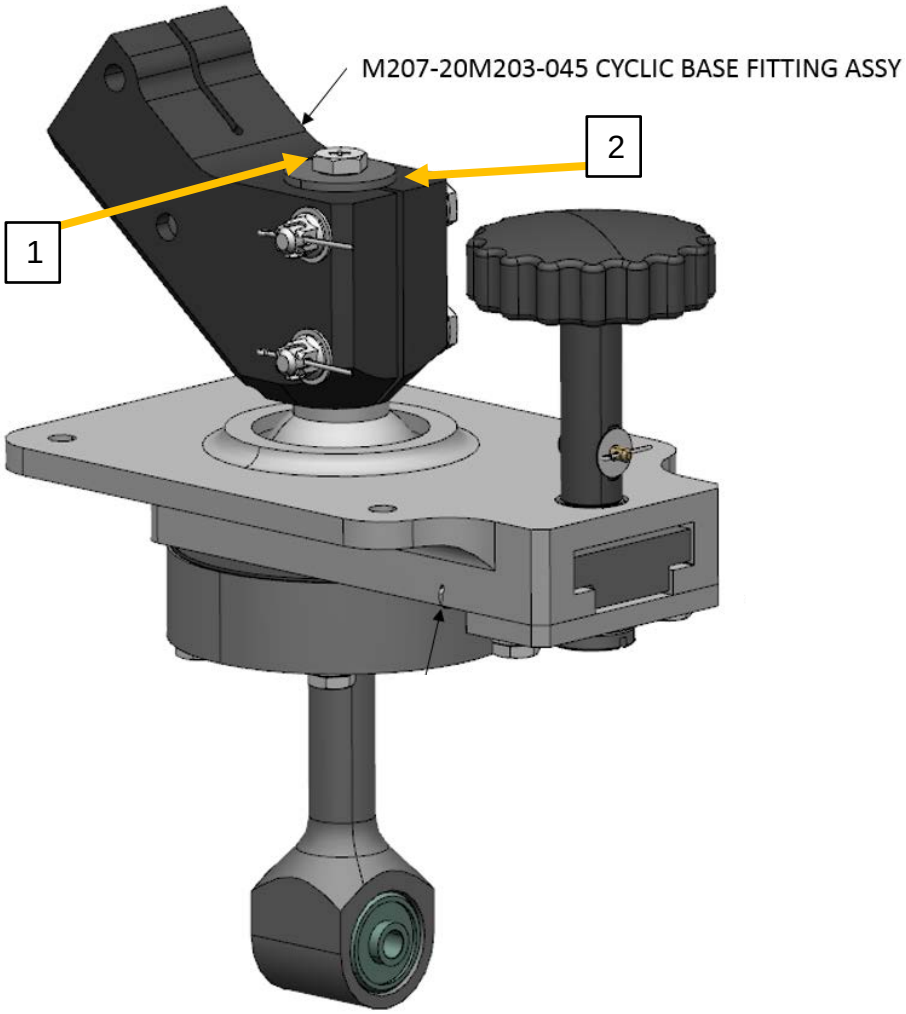

Figure 2 – Pilot Cyclic Base Fitting

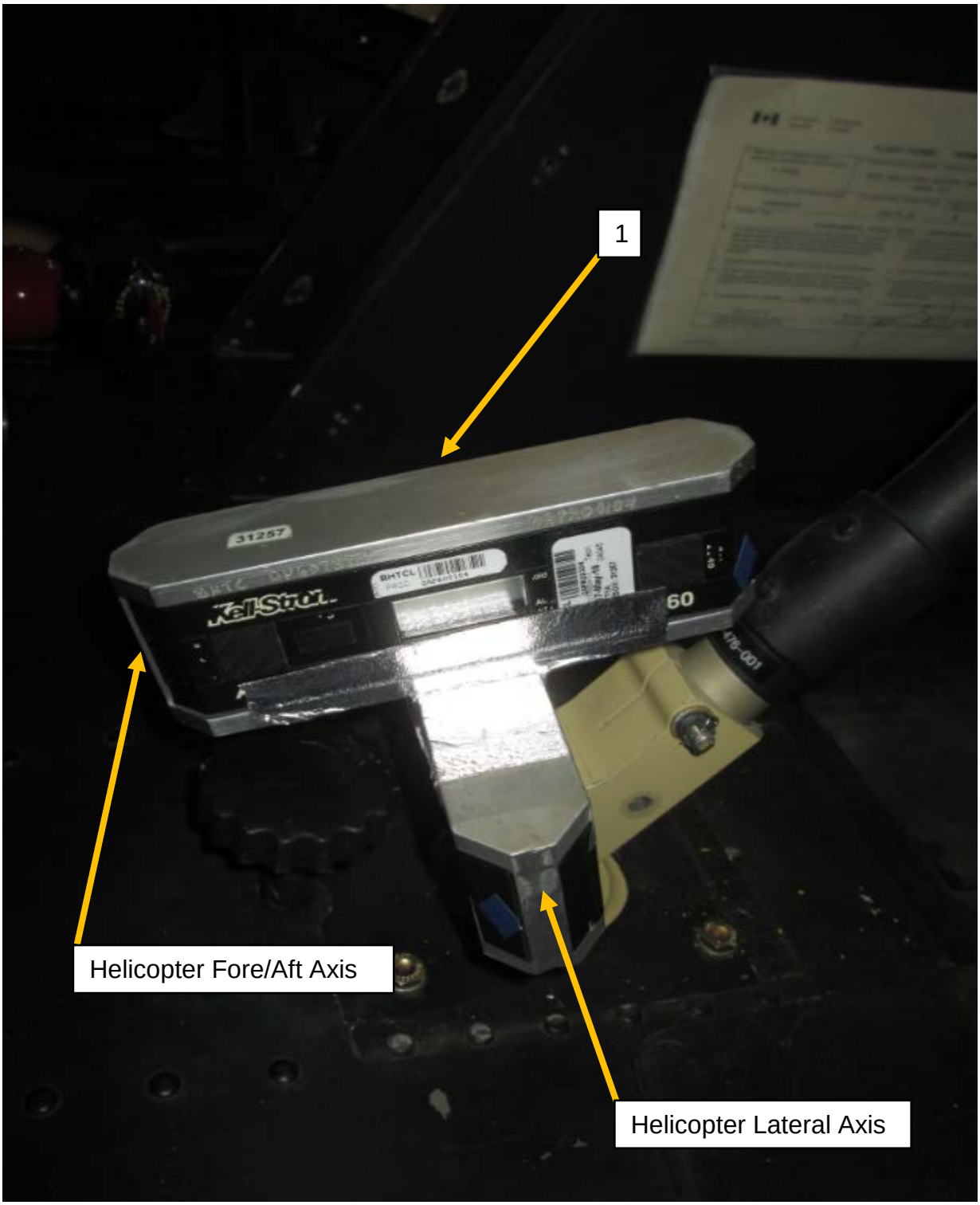

Figure 3 – Pilot Cyclic Base Fitting and Protractor

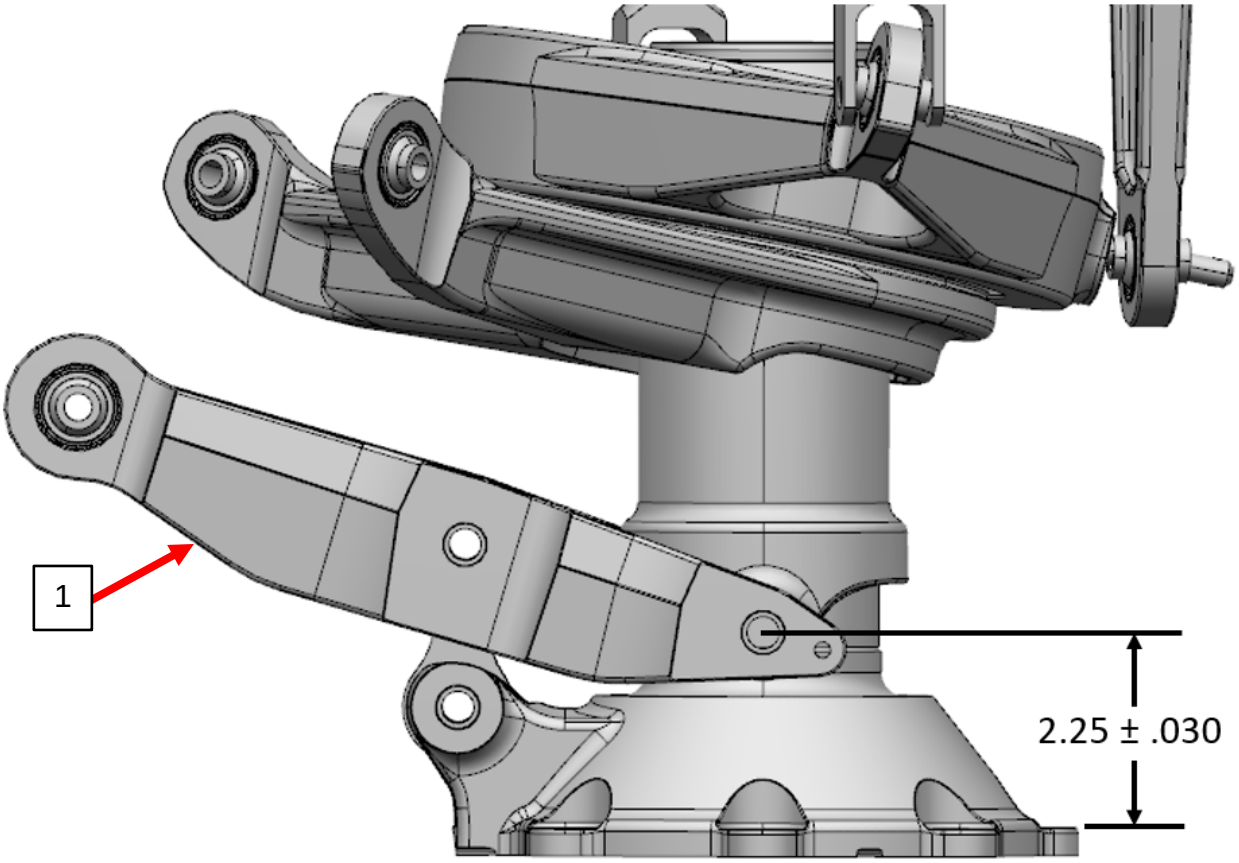

Figure 4 – Collective Lever Measurement

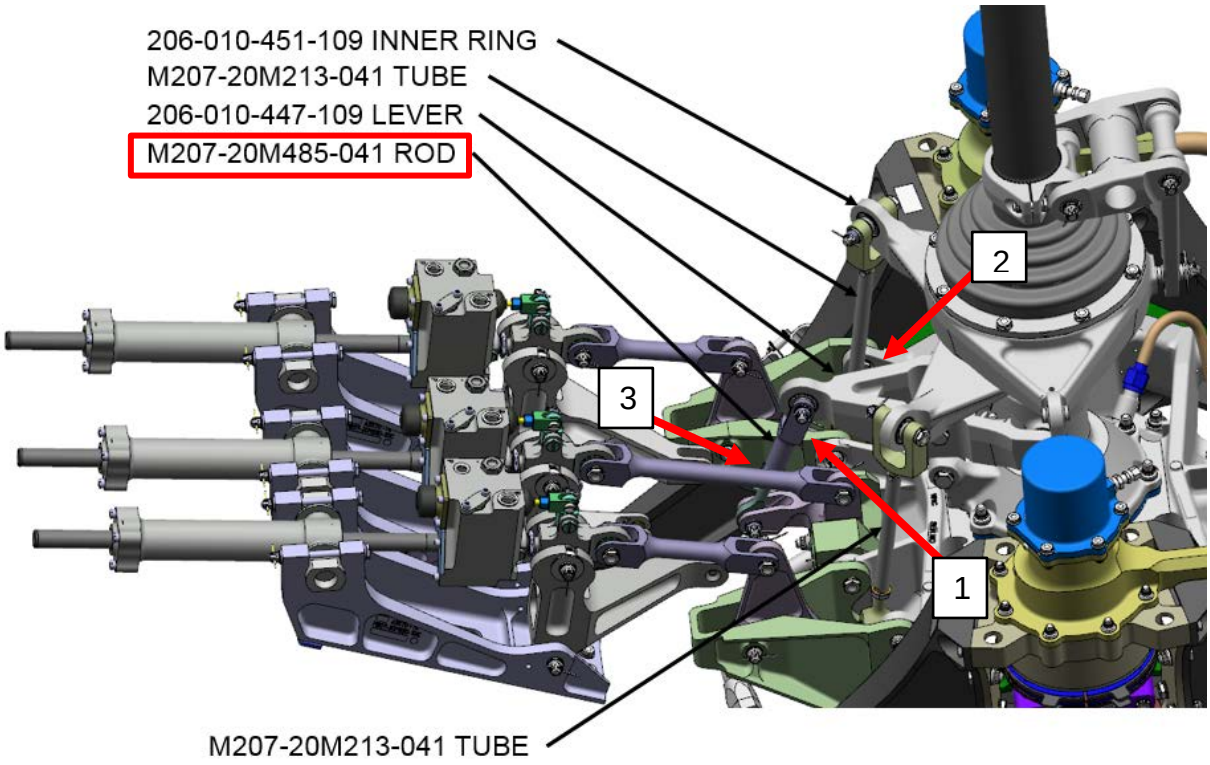

Figure 5 – M207-20M485-041 Control Tube Adjustment

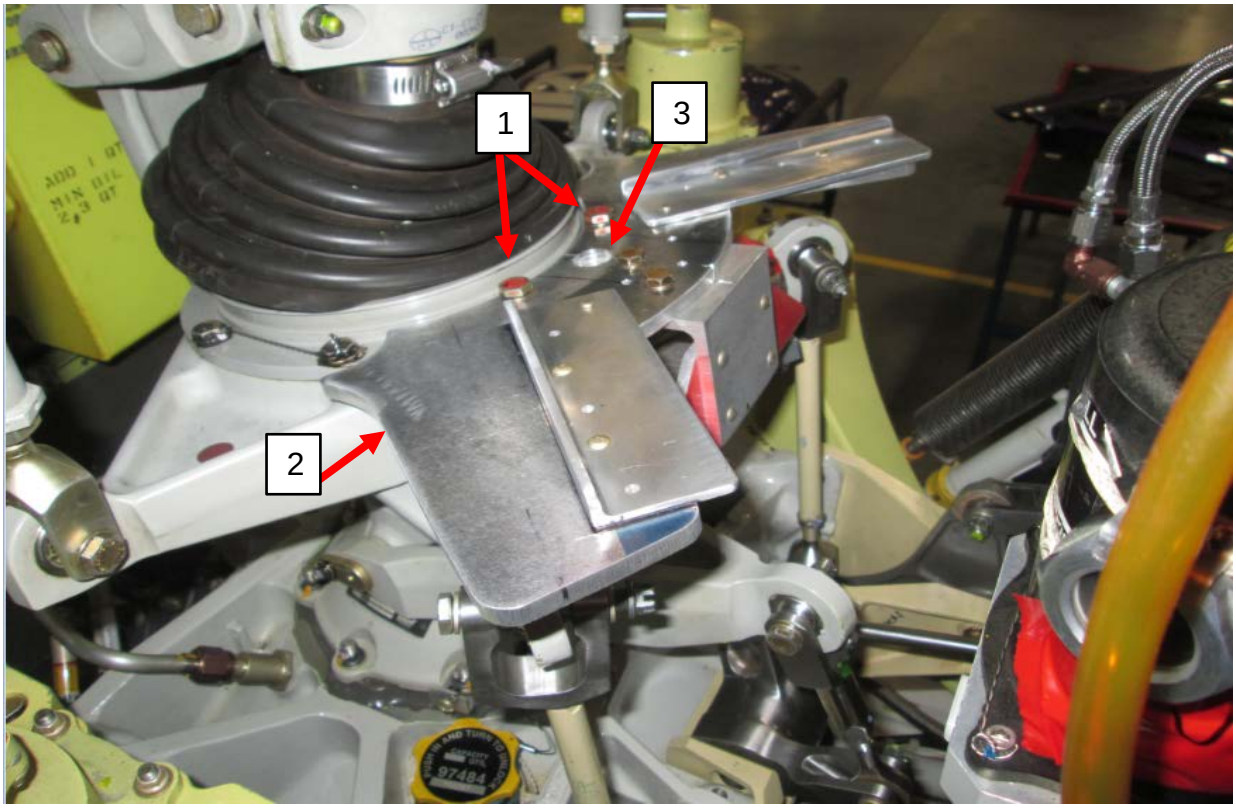

Figure 6 – 505SK409-102 Swashplate Angle Measurement Tool

Figure 7 – 505SK409-101 Mast Zero Tool

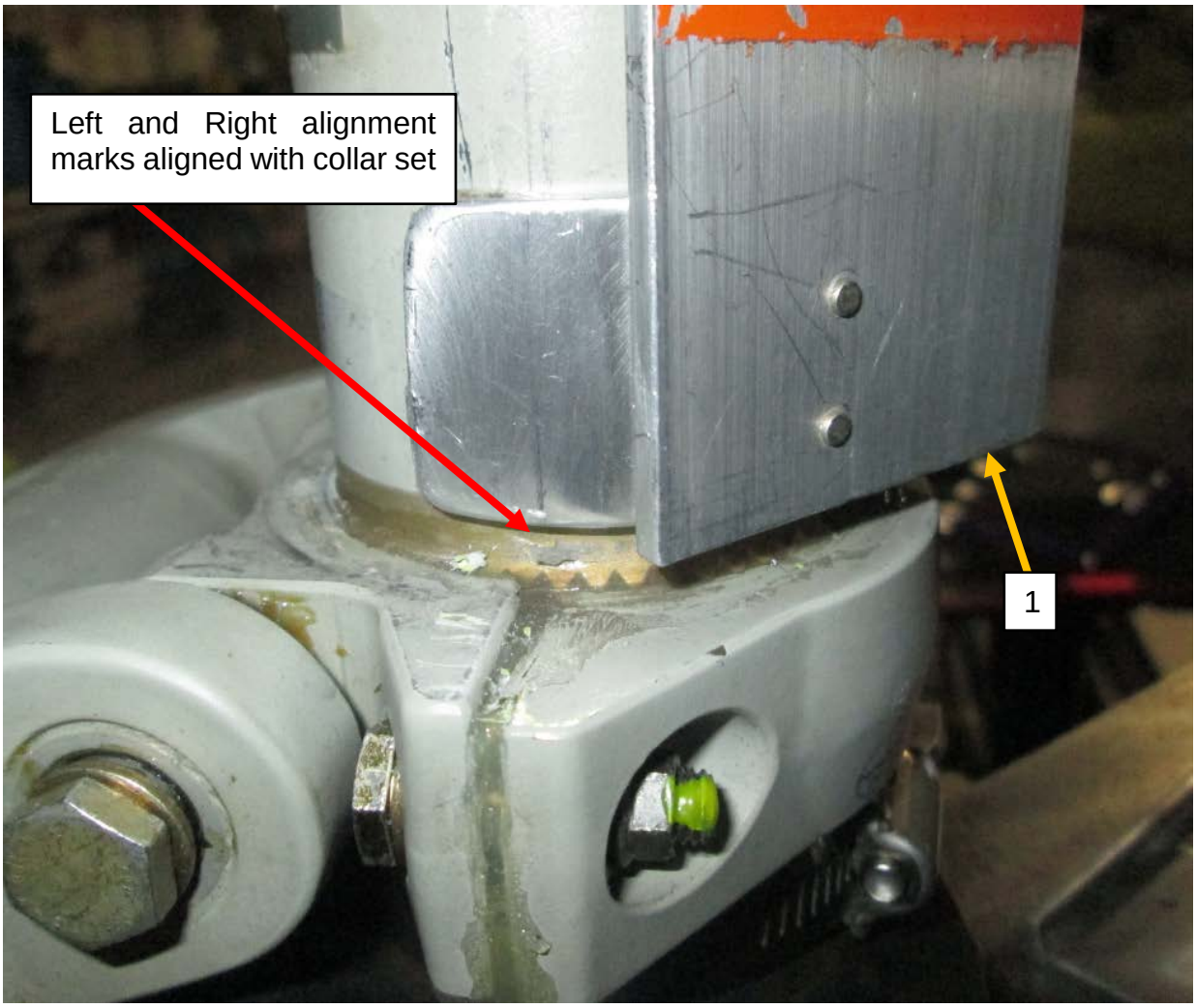

Figure 8 – 505SK409-101 Mast Zero Tool

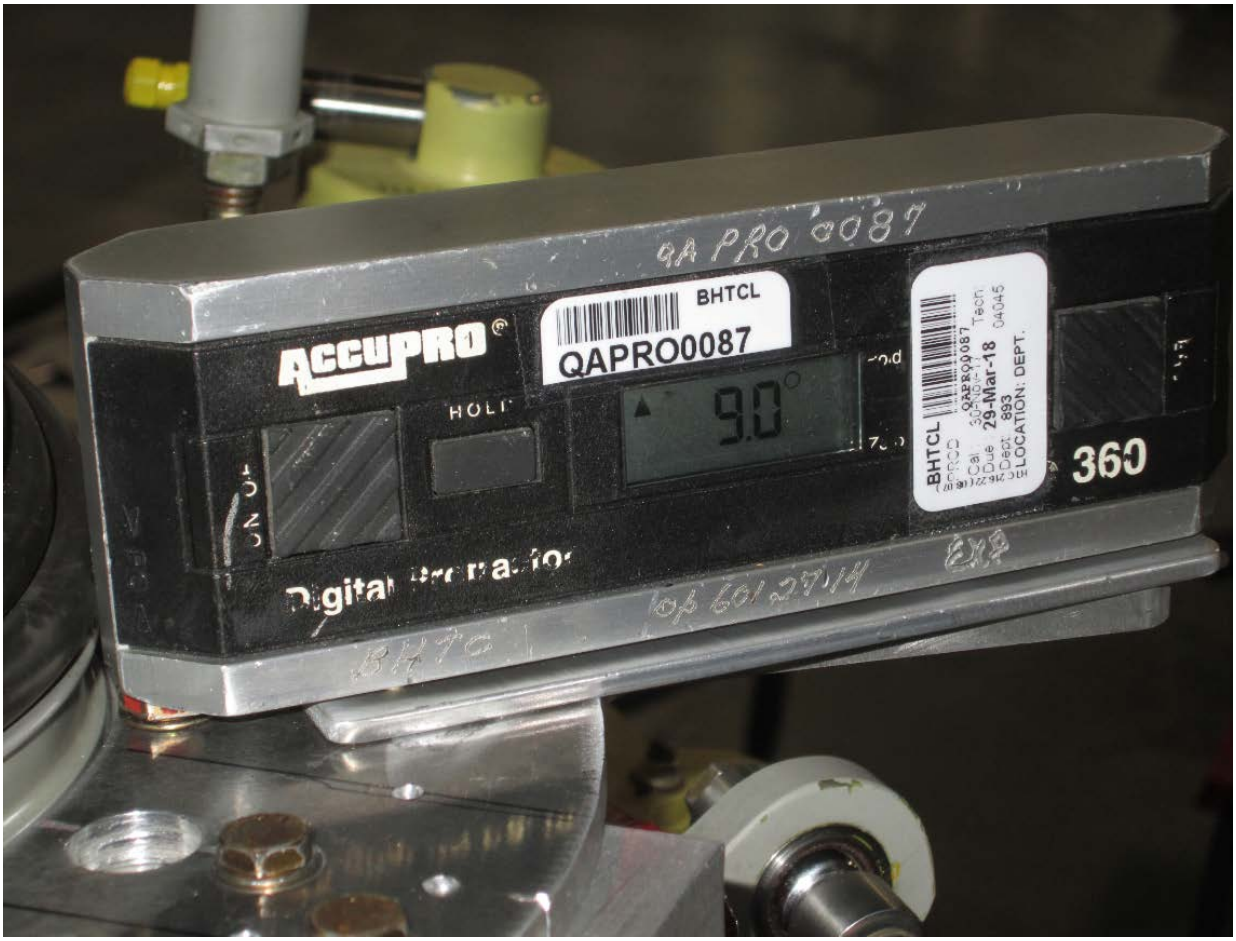

Figure 9 – Protractor on 505SK409-102 Swashplate Angle Measurement Tool

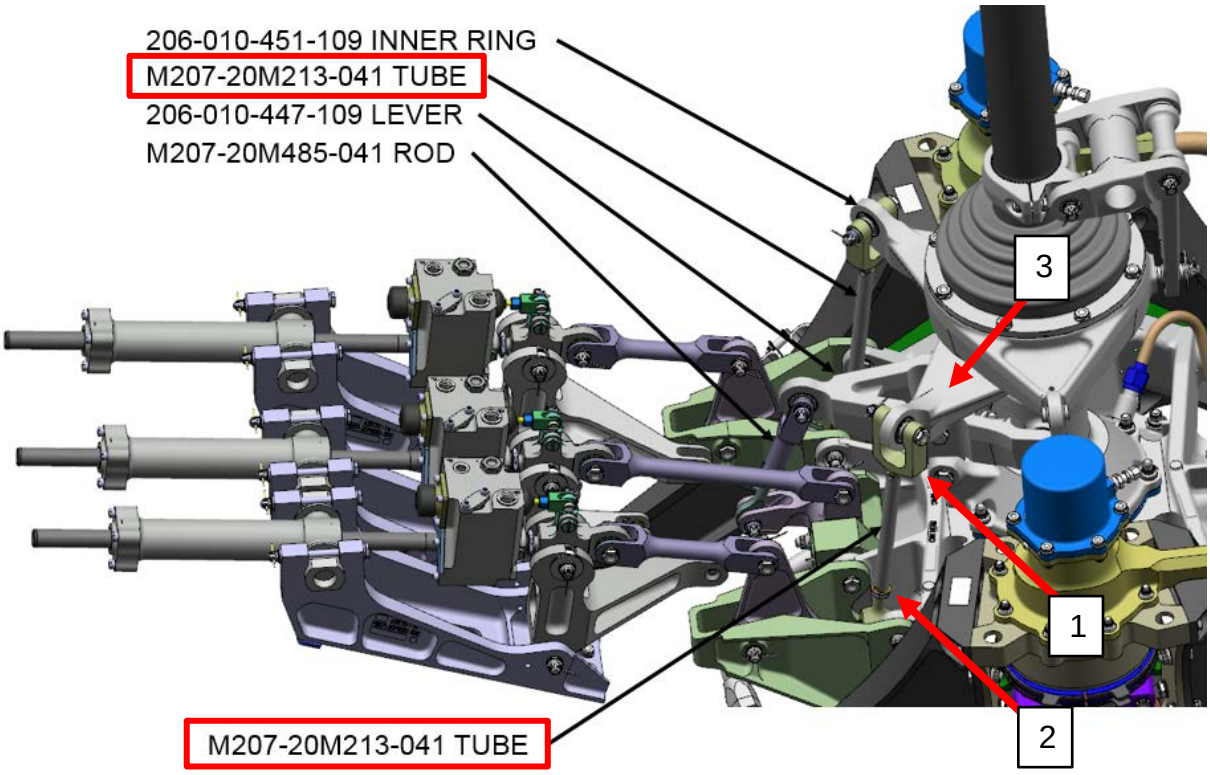

Figure 10 – M207-20M213-041 Control Tube Adjust