A Textron Company

ALERT SERVICE BULLETIN **429-23-60**

PSL #1511

28 August 2023

Revision A, 13 February 2024

MODEL AFFECTED: **429**

SUBJECT: **TAIL ROTOR SHAFT ASSEMBLY 429-044-201-107, INSPECTION OF AND INTRODUCTION OF AIRWORTHINESS LIMITATION SCHEDULE.**

HELICOPTERS AFFECTED: **Serial numbers 57001 through 57447, 57449, 57450, 57452 through 57460, and 57462 through 57464.**

[Serial numbers 57448, 57451, 57461, 57465 and subsequent will have the intent of this bulletin accomplished prior to delivery.]

COMPLIANCE: **PART I** – At next scheduled periodic inspection.

PART II – Prior to, or upon reaching, 10,000 flight hours component Total Time In Service (TTIS) of the fan shaft assembly 429-044-201-109.

DESCRIPTION:

Bell has been informed that certain tail rotor shaft assemblies 429-044-201-107 may have been improperly manufactured with Monel rivets instead of the required Corrosion Resistant Steel (CRES) rivets. This Alert Service Bulletin (ASB) will require a one-time inspection of the shaft assembly to determine the type of rivets installed. If any of the rivets are Monel, the shaft assembly will be re-identified as a 429-044-201-109 assembly and assigned an Airworthiness Limitation Schedule (ALS) retirement life of 10,000 flight hours which will be added to the Chapter 4 (Table 1) of the 429-MPI Maintenance Planning Information. Electronic versions of the Chapter 4 will be made available on the www.bellcustomer.com and www.mybell.com websites.
Tail rotor shaft assemblies 429-044-201-107 with all CRES rivets can remain in service with no ALS retirement life assigned.

Revision A of this bulletin introduces changes to the **WARRANTY** and **MATERIALS** sections. Operators that have already complied with the original release of this bulletin meet the intent of this revision.

Applicability of this bulletin to any spare part shall be determined prior to its installation on an affected helicopter.

APPROVAL:

The engineering design aspects of this bulletin are Transport Canada Civil Aviation (TCCA) approved.

CONTACT INFO:

For any questions regarding this bulletin, please contact:

Bell Product Support Engineering
Tel: 1-450-437-2862 / 1-800-363-8023 / productsupport@bellflight.com

MANPOWER:

Approximately 1.5 man-hour is required to complete **PART I** of this bulletin.
Approximately 4.0 man-hours are required to complete **PART II** of this bulletin.
This estimate is based on hands-on time and may vary with personnel and facilities available.

WARRANTY:

Owners / Operators of Bell Helicopters who comply with the instructions in this bulletin will be eligible to receive labor as applicable, listed in the bulletin. The www.mybell.com portal allocates specific warranty entitlement for an aircraft by serial number. The Product Service Letter (PSL) number which will be listed below the bulletin number on the introduction page. This is going to be a required field when submitting a claim on the Bulletins Tab for labor. If you receive an ASB or TB that does not have a PSL number, then there is no warranty entitlement for that bulletin.

Labor entitlement: Yes

PART I $165.00 USD

To receive parts, labor, under warranty:

- If there is a PSL number identified in the bulletin you will be required to enter this PSL number which will validate warranty entitlement for the selected aircraft. Please ensure that you use the Bulletin tab on the warranty section on www.mybell.com portal to file your claim.

- Claims must be submitted no later than 12 months after the release of Rev A of this Bulletin.

NOTE: A user guide on how to submit a claim can be found here: How to Submit PSL Bulletin Claims.

MATERIAL:

Required Material:
The following material is required for the accomplishment of this bulletin and may be obtained through your Bell Supply Center.

Part Number	Nomenclature	Qty (Note)
429-044-200-107S	TAIL ROTOR SHAFT ASSEMBLY	1 (1,2,3,4)

NOTES:

1. Only required if inspection of the tail rotor shaft assembly identifies that Monel rivets are installed.
2. A one-time policy pricing of the 429-044-200-107S tail rotor shaft assembly will be available to owners/operators requiring to accomplish **PART II,** after Product Support Engineering (PSE) has received the requested information in step 8 of **PART I**. Note that this policy pricing will be subject to annual adjustments. Please contact your Spares Administrator to purchase a replacement shaft.
3. The tail rotor shaft assembly 429-044-200-107S will include the 429-044-201-107 shaft assembly (1, Figure 2, sheet 2 of 2), two impellers 206-061-432-127 (2), nuts (3), bolts (4), and washers (5 and 6) and will be dynamically balanced.
4. This tail rotor shaft assembly will be an “on-condition” component/part and **not** have an Airworthiness Limitation Schedule (ALS) retirement life assigned to it.

Consumable Material:
The following material is required to accomplish this bulletin, but may not require ordering, depending on the operator’s consumable material stock levels. This material may be obtained through your Bell Supply Center.

Part Number	Nomenclature	Qty (Note)	Reference *
2100-09016-02	CORROSION PREVENTIVE COMPOUND (GRADE 2)	1 PT (1)	C-104
2000-00697-00	Devcon 2-Ton (Clear Coat)	1 OZ (1)	C-298
2110-00010-00	ALIPHATIC NAPHTA	1 GAL (1)	C-305
2100-06673-00	ISOPROPYL ALCOHOL	1 GAL (1)	C-385
1650-03297-00	SAFETY WIRE (0.032”)	ROLL 1 LB (1)	C-405
COMMERCIAL	CHEESECLOTH	AR (2)	C-486
2010-05970-00	SEALANT	1 PT (1)	C-559

* C-XXX numbers refer to the consumables list in the BHT-ALL-SPM, Standard Practices Manual

NOTES:

1. Quantity indicated is the format that the product is delivered in. Actual quantity required to accomplish the instructions in this bulletin may be less than what has been delivered.
2. AR represents a quantity of "as required" dependent on amount required for the accomplishment of the procedures of this bulletin.

SPECIAL TOOLS:

Part Number	Nomenclature	Qty (Note)	Reference
429-244-001-101	Wrench	1	
429-244-002-101	Holding Plate	1	
OCT No. 1025 (or equivalent)	Bearing Puller	1 (1)	
Item No. 1	Workaid No. 1	1(2)	Figure 5
Item No. 4	Workaid No. 4	1(2)	Figure 5

NOTES:

1. Commercially available at OTC Service Solutions, 28635 Mound Road, Warren, MI 48092 USA (www.otctools.com).
2. Manufacture locally. Refer to Figure 5 for details of dimensions required.

WEIGHT AND BALANCE:

Not affected.

ELECTRICAL LOAD DATA:

Not affected.

REFERENCES:

429-MPI Maintenance Planning Information, Chapter 4 and 5.
429-MM Maintenance Manual, Chapters 53, 71, and 79.

PUBLICATIONS AFFECTED:

429-MPI Maintenance Planning Information, Chapter 4.
429-MM Maintenance Manual, Chapter 65.
429-IPB Illustrated Parts Breakdown, Chapter 65.

ACCOMPLISHMENT INSTRUCTIONS:

PART I – Tail rotor shaft assembly 429-044-201-107 one-time inspection.

1. Prepare the helicopter for maintenance.

2. Remove the following panels on the left and right sides to access the shaft assembly:

   a. Aft engine cowl assemblies (700CL and 700CR) (DMC-429-A-53-00-00-49A-520A-A).

   b. Forward exhaust fairings (700GL and 700GR) (DMC-429-A-53-00-00-51A-520A-A).

-NOTE-

The part number and serial number of the fan shaft assembly will be vibro-etched on the flange of the forward adapter (Figure 1).

3. Verify part number of the tail rotor shaft assembly.

   a. If the part number is 429-044-201-105 go to step 9.

   b. If the part number is 429-044-201-107 go to step 4.

-NOTE-

If required to allow improved inspection of the tail rotor shaft assembly rivets, use cheesecloth (C-486), or equivalent, wetted with aliphatic naphtha (C-305) or isopropyl alcohol (C-385) to clean the areas to be inspected. The use of a bright light and magnifying glass may also be required in identification of the rivet type.

4. Inspect rivet head markings of **all** rivets (8, Figure 2) used to attach the forward and aft adapters (7) to the tube (1) of the shaft assembly.

   a. If **any** rivet has an “M”, for Monel (Figure 3), stamped on the rivet head go to step 5.

   b. If **all** rivets have a “C”, for CRES, stamped on the rivet head go to step 9.

5. Using a fine tipped permanent ink marker strike through the last three digits of the part number (-107) of the tail rotor shaft assembly and add “-109” as follows:

429-044-201-~~**107**~~ **-109**

6. Seal the areas marked in step 5 with one coat of clear epoxy (C-298) and let cure.

-NOTE-

Blank Historical Service Record (HSR) cards can be downloaded from the Technical Publications website at www.mybell.com (RECORD CARDS).

7. Create a Historical Service Record (HSR) card for the 429-044-201-109 tail rotor shaft assembly, that will become a sub assembly of the 429-044-200-107 fan shaft assembly, identifying the part number of the shaft assembly, serial number of the shaft assembly, the date, Total Time In Service (TTIS) of the shaft assembly, the helicopter serial number on which it is installed, adding an airworthiness limitation schedule retirement life of 10,000 flight hours, and how many hours left before requiring removal.

   a. Insert the HSR that has been created in the helicopter log books.

8. Send an email to Product Support Engineering (PSE) at productsupport@bellflight.com with the following information:

   (1) In the **subject line** of the email, include the following information:

   (a) The helicopter model.

   (b) The helicopter serial number.

   (c) The text **ASB 429-23-60**.

   (d) The name of the operator.

   (e) The tail rotor shaft assembly serial number.

   (f) The Total Time In Service (TTIS) of the tail rotor shaft assembly.

   (g) The text AFFECTED.

   Example email subject line:
   429 (57001) – ASB 429-23-60 - Bell Textron Inc – S/N BH000000 (TTIS 5400 hours) - AFFECTED

9. Install aft engine cowl assemblies (700CL and 700CR) (DMC-429-A-53-00-00-47A-720A-A).

10. Install forward exhaust fairings (700GL and 700GR) (DMC-429-A-53-00-00-49A-720A-A).

11. Make an entry in the helicopter logbook and historical service records indicating compliance with **PART I** of this Alert Service Bulletin.

PART II – Replacement of 429-044-201-109 tail rotor shaft assembly.

-NOTE-

Ensure that a 429-044-200-107S tail rotor shaft assembly and required tools/workaids are available prior to accomplishment of the instructions below.

1. Prepare the helicopter for maintenance.

2. Remove fan shaft assembly 429-044-200-107 (DMC-429-A-65-10-00-02A-520A-A).

3. Disassemble fan shaft assembly as follows:

   a. Remove the retaining ring (1, Figure 4) and the lockwasher (2) from the nut (3).

   b. Remove the retaining ring (35) and the lockwasher (34) from the nut (33).

   c. Remove the nuts (3 and 33) from the shaft assembly (17) as follows:

      (1) Install the Holding Plate Set (429-244-002-101) on the splined adapter (2, Figure 5).

      (2) Loosen and remove the nut (1) from the shaft assembly (3) with the Wrench (429-244-001-101).

      (3) Loosen and remove the nut (4) from the shaft assembly (3) with the Wrench (429-244-001-101).

      (4) Remove the Holding Plate Set (429-244-002-101) from the splined adapter (2).

-NOTE-

The splined adapter (4, Figure 4) is installed on helicopters S/N 57001 through 57080. The splined adapter (36) is installed on helicopters S/N 57081 and subsequent.

   d. Remove the splined adapters (4 or 36, and 32, Figure 4), as applicable, from the shaft assembly (17).

e. Remove the sealed bearing (6) and forward hanger (8) assembly from the shaft assembly (17) as follows:

(1) Put Workaid (Item No. 1, Figure 5) in position on the end of the shaft assembly (3).

(2) Pull out and remove the sealed bearing (6) and forward hanger (5) assembly from the shaft assembly (3) with the Bearing Puller (OTC No. 1025).

f. Repeat the previous step to remove the sealed bearing (30, Figure 4) and aft hanger (29) assembly from the shaft assembly (17).

g. Remove the forward blower housing (9) from the shaft assembly (17) as follows:

(1) Unscrew and remove the screws (15) and washers (14) from the inlet (13).

(2) Carefully remove the forward blower housing (9) from the shaft assembly (17).

h. Remove the aft blower housing (16) from the shaft assembly (17) as follows:

(1) Unscrew and remove the screws (27) and washers (26) from the inlet (25).

(2) Carefully remove the inlet (25) and aft blower housing (16) from the shaft assembly (17).

-NOTE-

The following step is optional to remove impellers 206-061-432-127 from the tail rotor shaft assembly 429-044-201-109, as replacement impellers will be included with the 429-044-200-107S tail rotor shaft assembly.

i. Remove impellers (12 and 22) as follows:

(1) Loosen and remove the nuts (19), washers (11 and 18), and bolts (10) from the forward impeller (12). If removed hardware is serviceable, return to inventory.

(2) Carefully remove the forward impeller (12) and inlet (13) from the shaft assembly (17). If removed impeller is serviceable, return to inventory.

(3) Loosen and remove the nuts (24), washers (21 and 23), and bolts (20) from the aft impeller (22). If removed hardware is serviceable, return to inventory.

(4) Carefully remove the aft impeller (22) from the shaft assembly (17). If removed impeller is serviceable, return to inventory.

j. Discard tail rotor shaft assembly 429-044-201-109.

CAUTION

PROTECT THE FAN SHAFT ASSEMBLY DURING THE ASSEMBLY PROCESS OR DAMAGE COULD OCCUR.

4. Assemble tail rotor shaft assembly 429-044-200-107 as follows:

-NOTE-

The washers (18) are used to balance the shaft and impellers assembly.

a. Temporarily remove the forward impeller (12) from the 429-044-200-107S tail rotor shaft assembly as follows:

(1) On the forward flange of the shaft assembly (17), record the location and quantity of washers (18) and the orientation of the forward impeller (12) to the shaft assembly (17).

(2) Loosen and remove the nuts (19), washers (11 and 18), and bolts (10) from the forward impeller (12).

(3) Carefully remove the forward impeller (12) from the shaft assembly (17).

b. Install the aft blower assembly on the shaft assembly (17, Figure 4) as follows:

(1) Install the aft blower housing (16) in position over the aft impeller (22).

(2) Install the inlet (25) on the aft blower housing (16) with the screws (27) and washers (26). Tighten the screws.

c. Install the forward blower assembly on the shaft assembly (17) as follows:

(1) Put the inlet (13) in position on the shaft assembly (17).

-NOTE-

Location and quantity of washers (18) must be the same as recorded in Step 4.a.(1).

(2) Install the nuts (19), washers (11 and 18), and bolts (10). Torque the nuts (19) 50 to 70 inch-pounds (5.65 to 7.9 Nm).

(3) Put the forward blower housing (9) in position over the forward impeller (12).

(4) Install the inlet (13) on the forward blower housing (9) with the screws (15) and washers (14). Tighten the screws.

d. Install the sealed bearing (6) and forward hanger (8) assembly on the shaft assembly (17) as follows:

CAUTION

DO NOT ALLOW SOLVENTS OR COMPOUNDS TO MAKE CONTACT WITH PARTS MADE OF ELASTOMERIC MATERIAL OR DAMAGE WILL OCCUR.

(1) Apply one coat of Corrosion Preventive Compound (C-104) to the inner diameter of the sealed bearing (6) and bearing mating surface on the shaft assembly (17).

-NOTE-

Orientation of the sealed bearing (6) and forward hanger (8) assembly must be such that the hanger flange is pointing aft (i.e., towards the shaft tube).

(2) Install the sealed bearing (6) and forward hanger (8) assembly on the shaft assembly (17) with the Workaid (Item No. 4, Figure 5) and an arbor press.

e. Install the sealed bearing (30, Figure 4) and aft hanger (29) assembly on the shaft assembly (17) as follows:

CAUTION

DO NOT ALLOW SOLVENTS OR COMPOUNDS TO MAKE CONTACT WITH PARTS MADE OF ELASTOMERIC MATERIAL OR DAMAGE WILL OCCUR.

(1) Apply one coat of Corrosion Preventive Compound (C-104) to the inner diameter of the sealed bearing (30) and bearing mating surface on the shaft assembly (17).

-NOTE-

Orientation of the sealed bearing (30) and aft hanger (29) assembly must be such that the hanger flange is pointing forward (i.e., towards the shaft tube).

(2) Install the sealed bearing (30) and forward hanger (29) assembly on the shaft assembly (17) with the Workaid (Item No. 4, Figure 5) and an arbor press.

-NOTE-

The forward splined adapter (4, Figure 4) is installed on helicopters S/N 57001 through 57080. The forward splined adapter (36) is installed on helicopters S/N 57081 and subsequent.

f. Install the forward splined adapter (4 or 36) on the forward end of the shaft assembly (17).

g. Install the aft splined adapter (32) on the aft end of the shaft assembly (17).

h. Install the nuts (3 and 33) on the shaft assembly (17) as follows:

(1) Apply one coat of Corrosion preventive compound (C-104) to the threads on both ends of the shaft assembly (17, Figure 4).

(2) Install the Holding Plate Set (429-244-002-101) on the splined adapter (2, Figure 5).

(3) Install the nut (1) on the shaft assembly (3) with the Wrench (429-244-001-101). Torque the nut 82 to 98 foot-pounds (112 to 132 Nm).

(4) Install the nut (4) on the shaft assembly (3) with the Wrench (429-244-001-101). Torque the nut 82 to 98 foot-pounds (112 to 132 Nm).

(5) Remove the Holding Plate Set (429-244-002-101) from the splined adapter (2).

i. Install the lockwasher (2, Figure 4) on the nut (3). Secure the lockwasher with the retaining ring (1).

j. Install the lockwasher (34) on the nut (33). Secure the lockwasher with the retaining ring (35).

5. Install fan shaft assembly 429-044-200-107 to helicopter (DMC-429-A-65-10-00-02A-720A-A).

6. Make an entry in the helicopter logbook and historical service records indicating compliance with **PART II** of this Alert Service Bulletin.

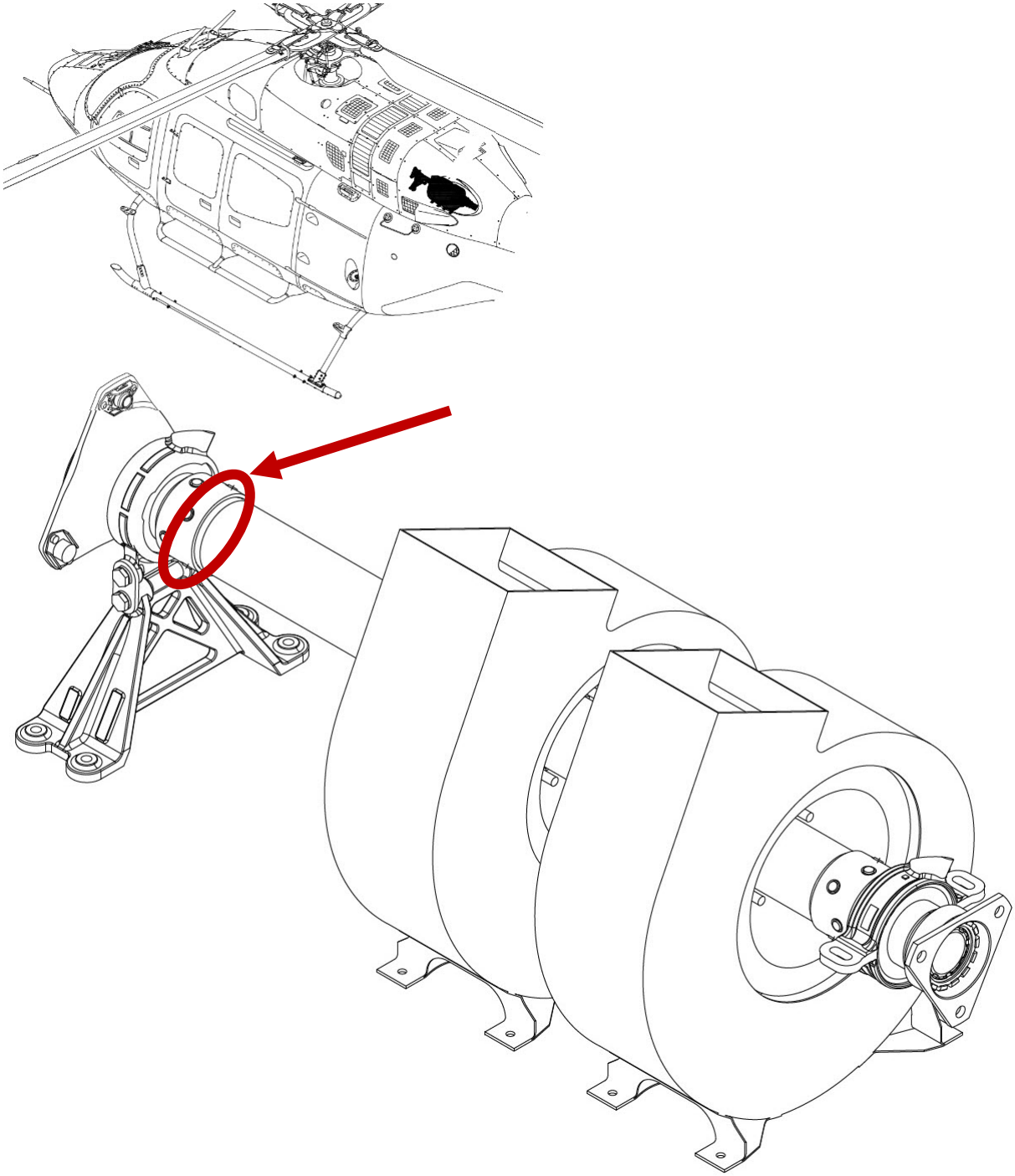

Figure 1 – Location of Fan Shaft Assembly Part and Serial Numbers

Approved for public release.

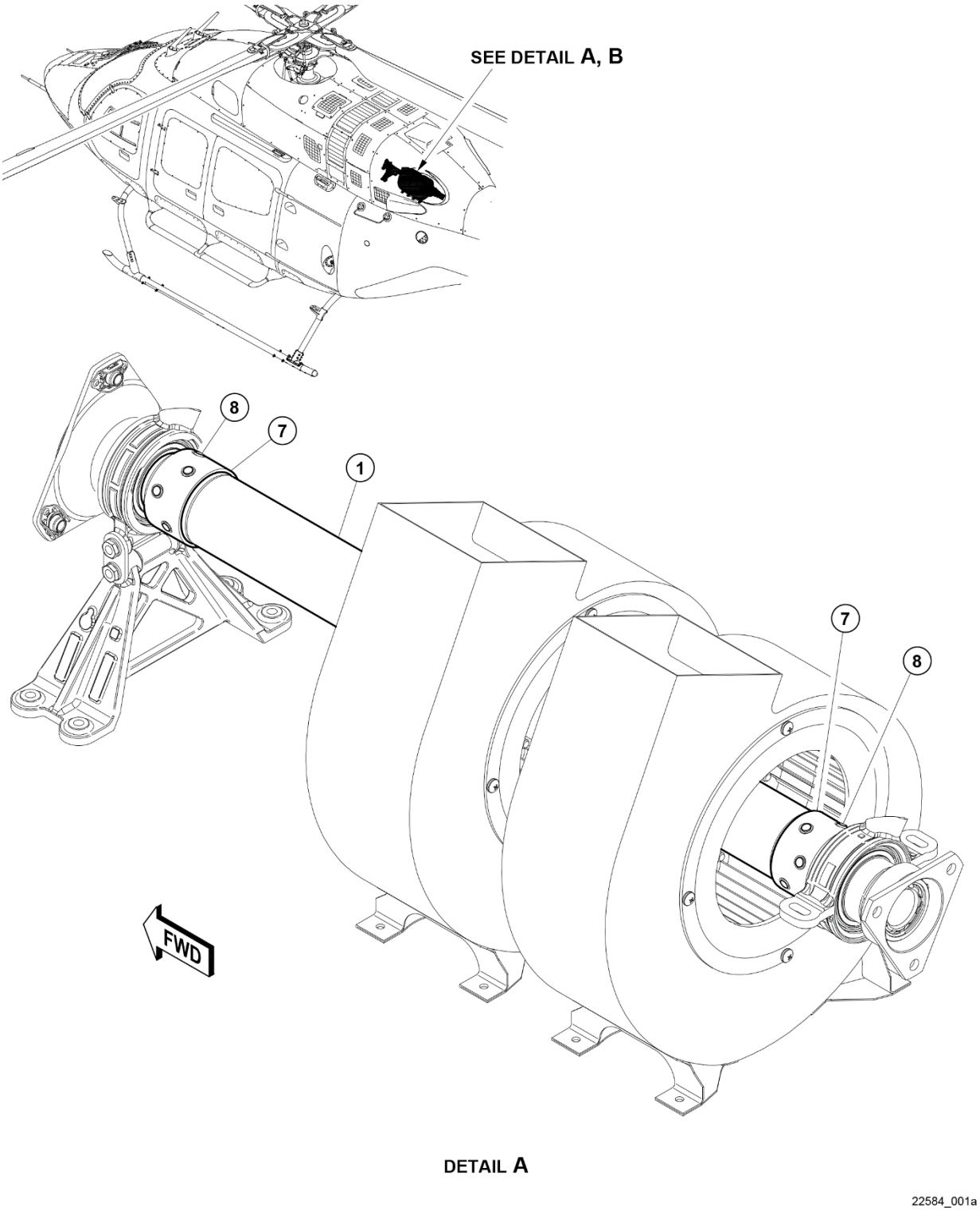

Figure 2 – Fan Shaft Assembly 429-044-200-107 (sheet 1 of 2)

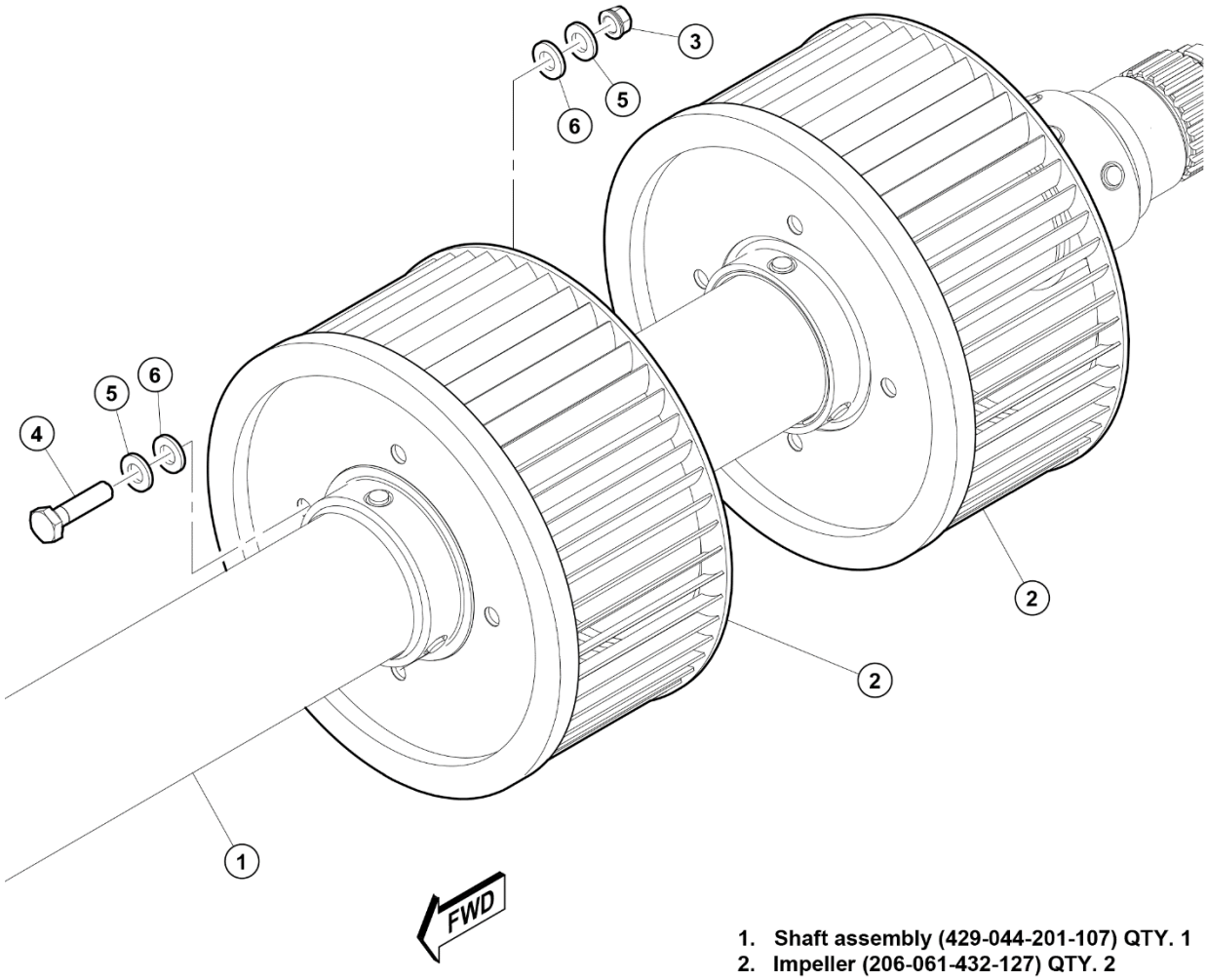

1. Shaft assembly (429-044-201-107) QTY. 1
2. Impeller (206-061-432-127) QTY. 2
3. Nut (NAS9926-4L) QTY. 8
4. Bolt (MS9784-14) QTY. 8
5. Washer (NAS1149F0463P) QTY. 16
6. Washer (NAS1149F0432P) QTY. 14
7. Adapter (427-044-203-103) QTY. 2
8. Rivet (NAS1398CW5AB03) QTY. 24

SEE DETAIL B
HOUSINGS NOT SHOWN FOR CLARITY

22584_001b

Figure 2 – Fan Shaft Assembly 429-044-200-107 (sheet 2 of 2)

Figure 3 – Example of Identification Marking ("M") on Monel Rivet Head

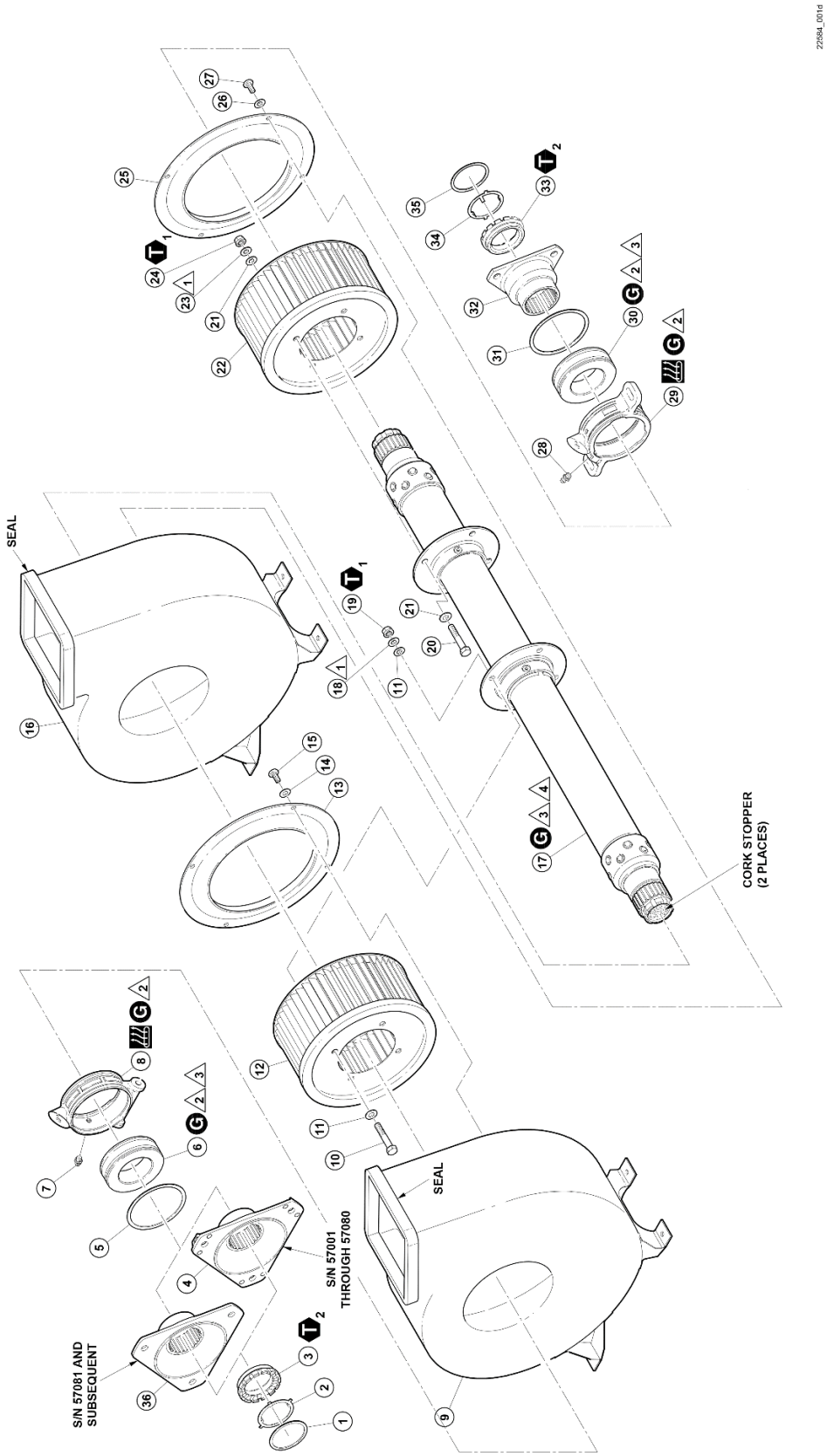

Figure 4 – Fan shaft Assembly 429-044-200-107 (sheet 1 of 2)

1. Retaining ring
2. Lockwasher
3. Nut
4. Forward splined adapter
5. Retaining ring
6. Sealed bearing
7. Lubrication fitting
8. Forward hanger
9. Forward blower housing
10. Bolt
11. Washer
12. Forward impeller
13. Inlet
14. Washer
15. Screw
16. Aft blower housing
17. Shaft assembly
18. Washer
19. Nut
20. Bolt
21. Washer
22. Aft impeller
23. Washer
24. Nut
25. Inlet
26. Washer
27. Screw
28. Lubrication fitting
29. Aft hanger
30. Sealed bearing
31. Retaining ring
32. Aft splined adapter
33. Nut
34. Lockwasher
35. Retaining ring
36. Forward splined adapter

G CORROSION PREVENTIVE COMPOUND (C-104)

HEAT APPLICATION (275°F/135°C MAX)

T1 50 TO 70 IN-LBS (5.65 to 7.9 Nm)

T2 82 TO 98 FT-LBS (112 TO 132 Nm)

NOTES

1. The washers (18 and 23) are used to balance the shaft and impellers assembly.
2. Apply corrosion preventive compound (C-104) to bearings (6 and 30) outer diameter and hangers (8 and 29) inner diameter before installation.
3. Apply corrosion preventive compound (C-104) to bearings (6 and 30) inner diameter and working surface on the shaft assembly (17) before installation.
4. Apply corrosion preventive compound (C-104) to the threads of the shaft assembly (17) before installation of the nuts (3 and 33).

22584_001e

Figure 4 – Fan shaft Assembly 429-044-200-107 (sheet 2 of 2)

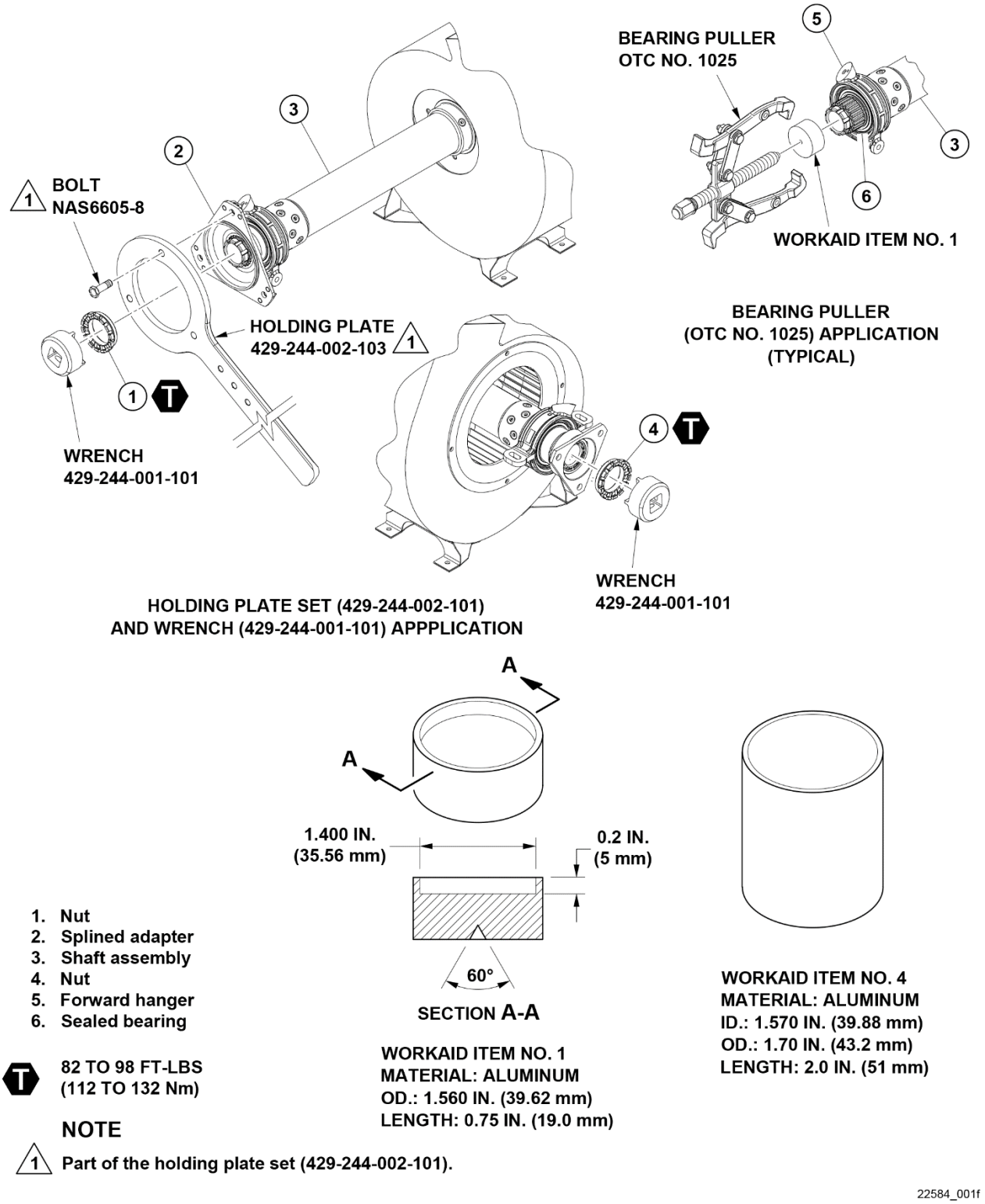

Figure 5 – Tools and Workaids Required for Disassembly/Assembly of Fan Shaft