A Textron Company

ALERT SERVICE BULLETIN **412-23-191**

19 January 2023

MODEL AFFECTED: **412EP**

SUBJECT: **N1 CONTROL CABLE AND WIRE HARNESS INSTALLATION, MODIFICATION OF.**

HELICOPTERS AFFECTED: **Serial numbers 39101 through 39103, 39105 through 39107, 39110, 39112 and 38001.**

[Serial numbers 39104, 39108, 39109, 39111, 39113 through 39999 and 38002 through 38999 will have the intent of this bulletin accomplished prior to delivery.]

COMPLIANCE: **PART I:** No later than 25 flight hours or 30 days after the release date of this bulletin

PART II: No later than 300 flight hours or 90 days after accomplishment of PART I.

DESCRIPTION:

Bell has discovered a possible chafing condition with a wire harness, the (412EPX configuration engine 1) N1 control cable (7-46300-2) and adjacent components between fuselage station (STA) 150.41 and 155.1. The associated clamps and bracket at the STA 155.1 clamping arrangement may have been bent to avoid fouling of the N1 control cable and wiring harness with the side of a lightening hole. There is also potential wire harness chafing condition in the left-hand door post at water line (WL) 38.60 and below the floor (WL 22.0) at STA 52.0 and STA 63.3.

Part I of this Bulletin requires inspection of the engine 1 N1 control cable and the wiring harnesses described above for fouling, chafing and damage.

Part II of this Bulletin requires the engine 1 N1 control cable and wire harnesses, at the locations described above, to be repositioned and the clamping arrangements to be

modified. A chafing protection sleeve will also need to be installed over a portion of the wiring harness between STA 150.41 and 155.1.

Applicability of this bulletin to any spare part shall be determined prior to its installation on an affected helicopter.

APPROVAL:

The engineering design aspects of this bulletin are FAA approved.

CONTACT INFO:

For any questions regarding this bulletin, please contact:

Bell Product Support Engineering
Tel: 1-450-437-2862 / 1-800-363-8023 / productsupport@bellflight.com

MANPOWER:

Approximately 2.0 man-hours are required to complete Part I of this bulletin. Approximately 5.0 man-hours are required to complete Part II of this bulletin. This estimate is based on hands-on time and may vary with personnel and facilities available.

WARRANTY:

There is no warranty credit applicable for parts or labor associated with this bulletin.

MATERIAL:

Required Material:
The following material is required for the accomplishment of this bulletin and may be obtained through your Bell Supply Center.

Part Number	Nomenclature	Qty (Note)
120-282-3A4	Standoff	1 (1)
120-284-05D15	Shim	1
NAS43DD3-24N	Spacer	1
NAS43DD3-32N	Spacer	1
NAS43DD3-34N	Spacer	1
AS21919WDG05Y	Clamp	1
AS21919WDG07Y	Clamp	1
AS21919WDG16Y	Clamp	1
NAS1149D0332J	Washer	1
NAS1801-3-16	Screw	1
NAS1801-3-18	Screw	1
NAS1801-3-26	Screw	1
130-066-2-009	Sleeve	1 (2)
MS20470AD4-X	Rivet, Universal Head	4 (3)
NAS9301B-4-XX	Rivet, Blind	4 (3)
7-46300-2	Control Cable	A/R (4)

NOTES:

1. In lieu of standoff 120-282-3A4, standoff 120-282-3-4 can be used but will require the holes to be enlarged.
2. Bulk sleeve material can be procured by the foot, order 2640-00103-00. 4.5 inches required.
3. Either rivet type MS20470AD4 or NAS9301B-4 can be used. Length to be determined at installation.
4. This item is only required if the control cable is found damaged.

Consumable Material:
The following material is required to accomplish this bulletin, but may not require ordering, depending on the operator's consumable material stock levels. This material may be obtained through your Bell Supply Center.

Part Number	Nomenclature	Qty (Note)	Reference *
2100-00345-00	Chem Film (Alodine)	A/R (1)	C-100
2230-00451-00	Primer, Epoxy Polyamide	A/R (1)	C-204
2600-07349-00	Lacing	A/R (1)	C-141

* C-XXX numbers refer to the consumables list in the BHT-ALL-SPM, Standard Practices Manual

NOTE 1: This consumable item may already be in customer's stock.

SPECIAL TOOLS:

None required.

WEIGHT AND BALANCE:

Not affected

ELECTRICAL LOAD DATA:

Not affected.

REFERENCES:

BHT-412-IPBS-EPX Illustrated Parts Breakdown Supplement
BHT-412-MMS-EPX Maintenance Manual Supplement
BHT-ALL-SPM Standard Practices Manual
BHT-ELEC-SPM Electrical Standard Practices Manual

PUBLICATIONS AFFECTED:

BHT-412-IPBS-EPX Illustrated Parts Breakdown Supplement

ACCOMPLISHMENT INSTRUCTIONS:

Part I. N1 control cable and wiring harness inspection

1. Prepare the helicopter for maintenance.

2. Refer to Figure 1, View A and View B, gain access to clamping arrangement at bulkhead at fuselage station (STA) 155.1 and Left Buttock Line (LBL) 11.25.

3. Inspect the N1 control cable (7-46300-2) and the wire harness between STA 150.41 and STA 155.1 (View A) for chafing damage and fouling with adjacent components (hydraulic servo support hardware, friction damper assembly, etc.) and the structure.

4. Inspect the N1 control cable and the wire harness at STA 155.1 (View B) clamping arrangement for chafing damage with the structure (lightening hole) and cracked standoff or clamps.

5. Refer to Figure 1, Detail C and View D, gain access to clamping arrangement in the left-hand door post at Water Line (WL) 38.60.

6. Inspect the wire harness (412-079-711) in the left-hand door post at WL 38.60 (View D) clamping arrangement for chafing damage with the structure (lightening hole) damaged bracket or clamp.

7. Refer to Figure 1, View E, View F and View G, gain access to clamping arrangements below the floor (WL 22.0) at STA 52.0 and STA 63.3.

8. Inspect the wire harnesses (412-079-711 and 412-079-713) below the floor (WL 22.0) at STA 52.0 (View F) clamping arrangement for chafing damage with the structure (lightening hole) and the unused standoff and cracked standoff or clamps.

9. Inspect the wire harnesses (412-079-711 and 412-079-713) below the floor (WL 22.0) at 63.3 (View G) clamping arrangement for chafing damage with the structure (lightening hole) and cracked standoff or clamps.

-NOTE-

For repair instructions refer to Electrical Standard Practices Manual (BHT-ELEC-SPM) or contact Product Support Engineering (PSE) via email (productsupport@bellflight.com). If contacting PSE, ASB number and helicopter serial number must be listed in the email subject line.

10. If any damage or fouling with adjacent components is found at steps 3, 4, 6, 8 or 9 above it must be repaired before further flight. Repair damage and accomplish Part II of this ASB immediately.

11. If no damage or fouling with adjacent components is found, the helicopter can remain in service until Part II of this ASB is accomplished.

12. Make an entry in the helicopter logbook and historical service records indicating compliance with Part I of this Alert Service Bulletin.

Part II. N1 control cable and wiring harness installations modification

1. Prepare the helicopter for maintenance.

2. Refer to Figure 1, View B and Figure 2, View A (before modification), gain access to the clamping arrangement at the bulkhead at fuselage station (STA) 155.1 and Left Buttock Line (LBL) 11.25.

3. Remove and discard the existing clamping arrangement securing the wire harness and (Engine 1) N1 control cable.

4. Remove and discard L-bracket (1, Figure 2) and plug existing holes with rivets MS20470AD4 or NAS9301B-4. Rivet length to be determined at installation.

5. Apply one coat of epoxy polyamide primer (C-204) over rivets.

-NOTE-

Prior to installing shim (4) treat with chemical film (C-100). Apply chemical film (C-100) to reworked area.

-NOTE-

In lieu of standoff (3), standoff 120-282-3-4 can be used but will require the holes to be enlarged to 0.128 to 0.135 inches (3.25 to 3.43 mm).

6. Refer to Figure 2, View A (after standoff installation), locate and install standoff (3) and shim (4) using rivets (2) (either NAS9301B-4 or MS20470AD4). Rivet length to be determined at installation.

7. Apply one coat of epoxy polyamide primer (C-204) over rivets.

8. Refer to Figure 2 View A (after modification), position and install N1 control cable (412-060-700 installation) and electrical harness (412-075-801 installation) using spacer (5), clamps (6 and 7), washer (8) and screw (9).

-NOTE-

Use sleeve 130-066-2-009 (pre-cut to 4.5 inches) or use bulk sleeve 130-066-2 (order 2640-00103-00) trimmed to length.

9. Refer to Figure 2 Section B-B, install sleeve (10) over wire harness between STA 155.1 and STA 150.41 clamping arrangements. Secure sleeve (10) with lacing (C-141).

10. Inspect and confirm the N1 control cable installation (412-060-700) and wire harness installation (412-075-801) between STA 155.1 and STA 150.41 do not contact the surrounding components and structure.

11. Refer to Figure 3, View A, gain access to clamping arrangement in the left-hand door post at Water Line (WL) 38.60.

12. Remove the existing clamping arrangement; nut (1, Figure 3, Detail B, Before Modification), spacer (2), clamps (3 and 4), washer (5) and screw (6). Retain nut (1) and washer (5). Discard spacer (2), clamps (3 and 4) and screw (6).

13. Install new clamping arrangement; nut (1, Figure 3, Detail B, After Modification), spacer (7), clamp (8), washer (5) and screw (9) to secure the two branches of the wire harness (412-079-711) in the single clamp (8).

14. Inspect and confirm wire harness (412-079-711) does not contact the structure at WL 38.60

15. Refer to Figure 3, View C, View D (Before Modification) and View E (Before Modification), gain access to clamping arrangements below the floor (WL 22.0) at STA 52.0 and STA 63.3.

16. Remove the existing (STA 52.0) clamping arrangement; screw (11, Figure 3, View D, Before Modification), washer (5), clamp (12), spacer (10) and clamp (13). Retain washer (5), spacer (10), clamps (12 and 13) if clamps are not bent otherwise discard clamps. Discard screw (11).

17. Reposition wire harnesses 412-079-711 and 412-079-713 and install new clamping arrangement; spacer (14, Figure 3, View D, After Modification), clamp (13), spacer (10), clamp (12), washer (5) and screw (15).

18. Inspect and confirm wire harnesses (412-079-711 and 412-079-713) do not contact the structure at STA 52.0.

19. Remove and retain existing (STA 63.3) clamping arrangement; screw (11, Figure 3, View E, Before Modification), washer (5), clamps (12 and 13) and spacer (16).

-NOTE-

To provide additional clearance with the surrounding structure, if required, the position of clamps (12 and 13) can be reversed, and spacer (16) can be replaced by a shorter spacer NAS43DD3-40N.

20. Reposition wire harnesses 412-079-711 and 412-079-713 and install new clamping arrangement using retained hardware; spacer (16, Figure 3, View E, After Modification), clamps (12 and 13), washer (5) and screw (11).

21. Inspect and confirm wire harnesses (412-079-711 and 412-079-713) do not contact the structure at STA 63.3.

22. Install any access panels or equipment removed during accomplishment of this Bulletin.

23. Make an entry in the helicopter logbook and historical service records indicating compliance with this Alert Service Bulletin.

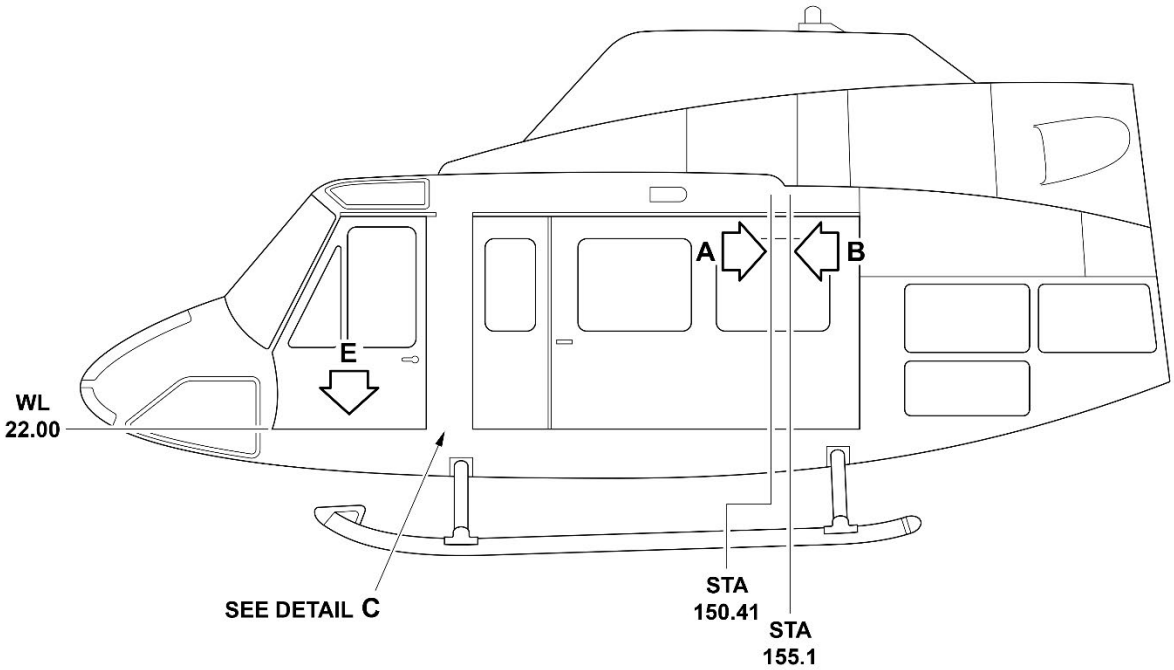

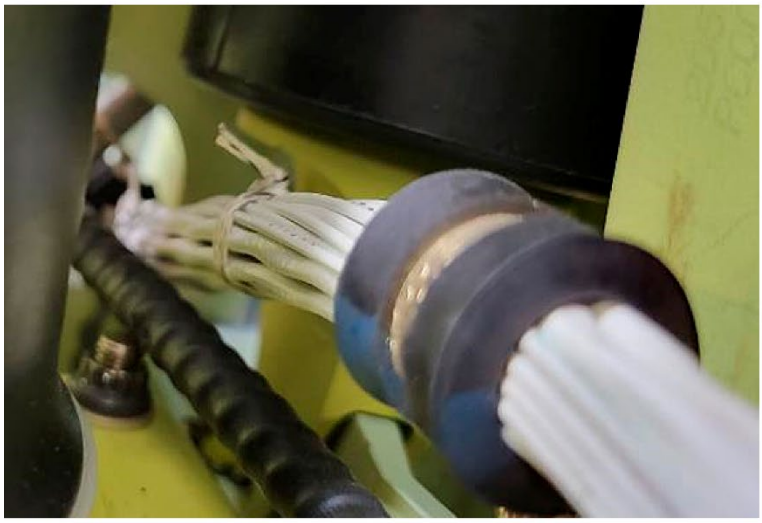

VIEW A
LOOKING AFT AT
STA 150.41 BULKHEAD

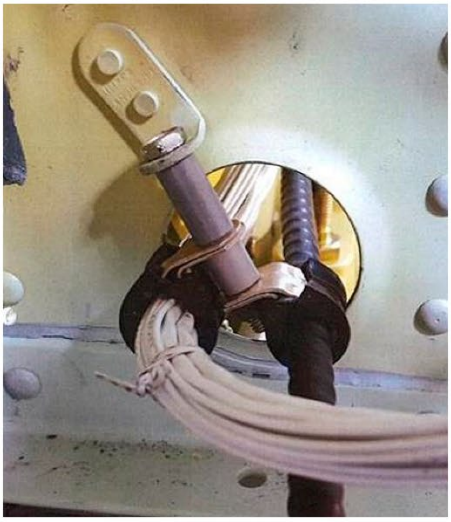

VIEW B
LOOKING FWD AT
STA 155.1 BULKHEAD

22580_001a

Figure 1 Inspection (Sheet 1 of 3)

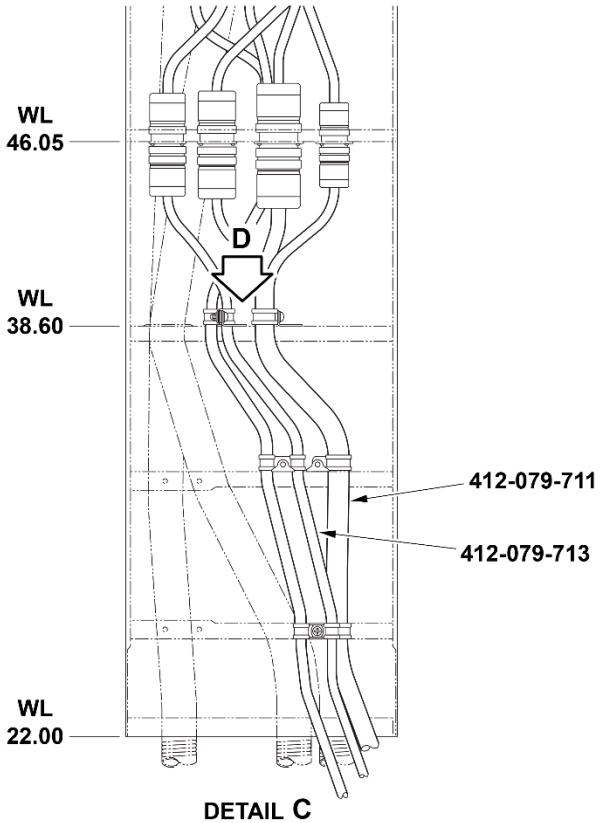

DETAIL C
LOOKING OUTBOARD AT
LH DOOR POST

VIEW D
LOOKING DOWN AT
WL 38.60

22580_001b

Figure 1 Inspection (Sheet 2 of 3)

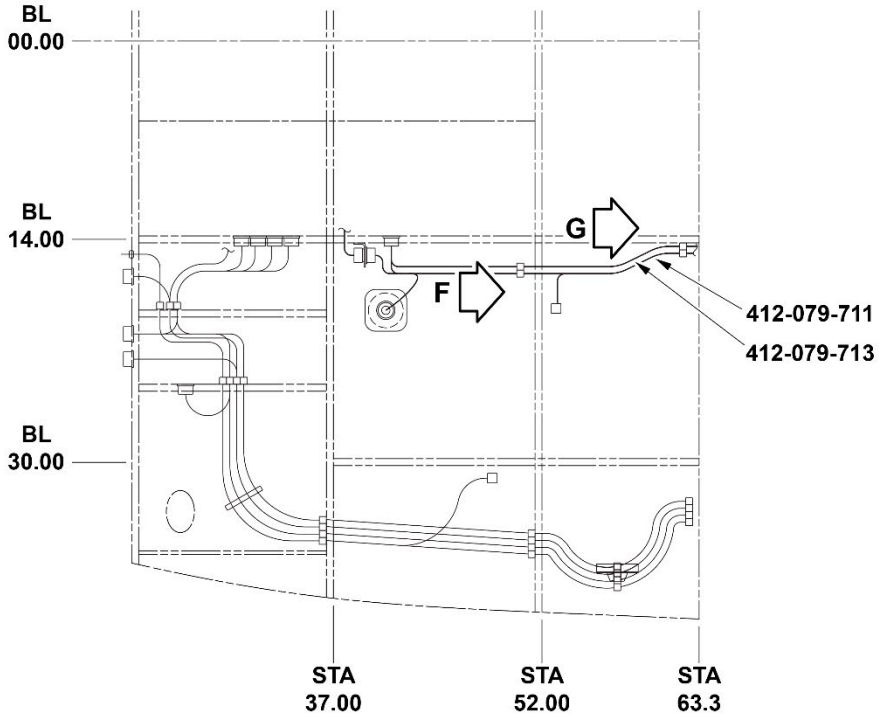

VIEW E
LOOKING DOWN AT
FLOOR (WL 22.00)

VIEW F
LOOKING AFT AT
STA 52.00

VIEW G
LOOKING AFT AT
STA 63.3

22580_001c

Figure 1 Inspection (Sheet 3 of 3)

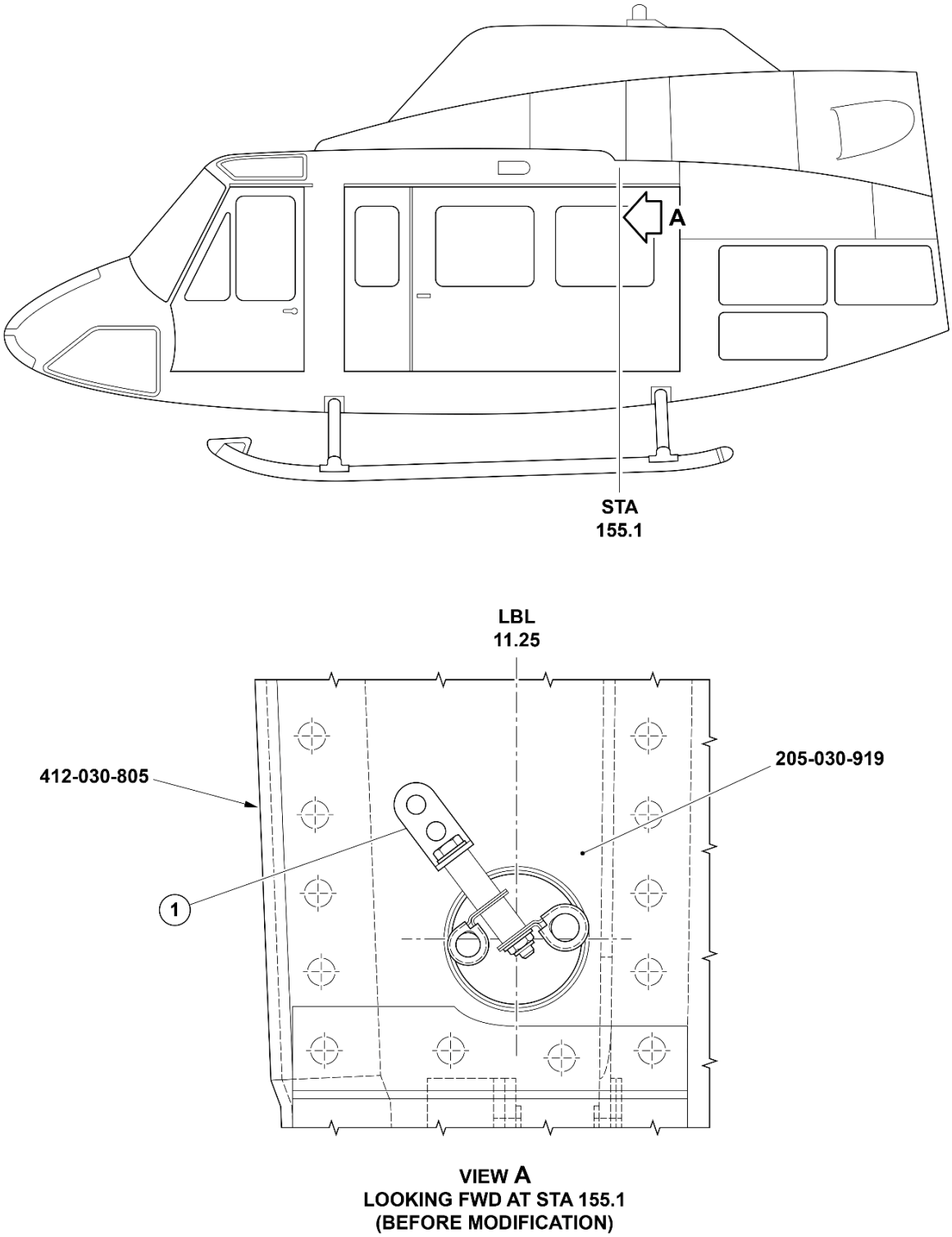

Figure 2 STA 155.1 Modification (Sheet 1 of 3)

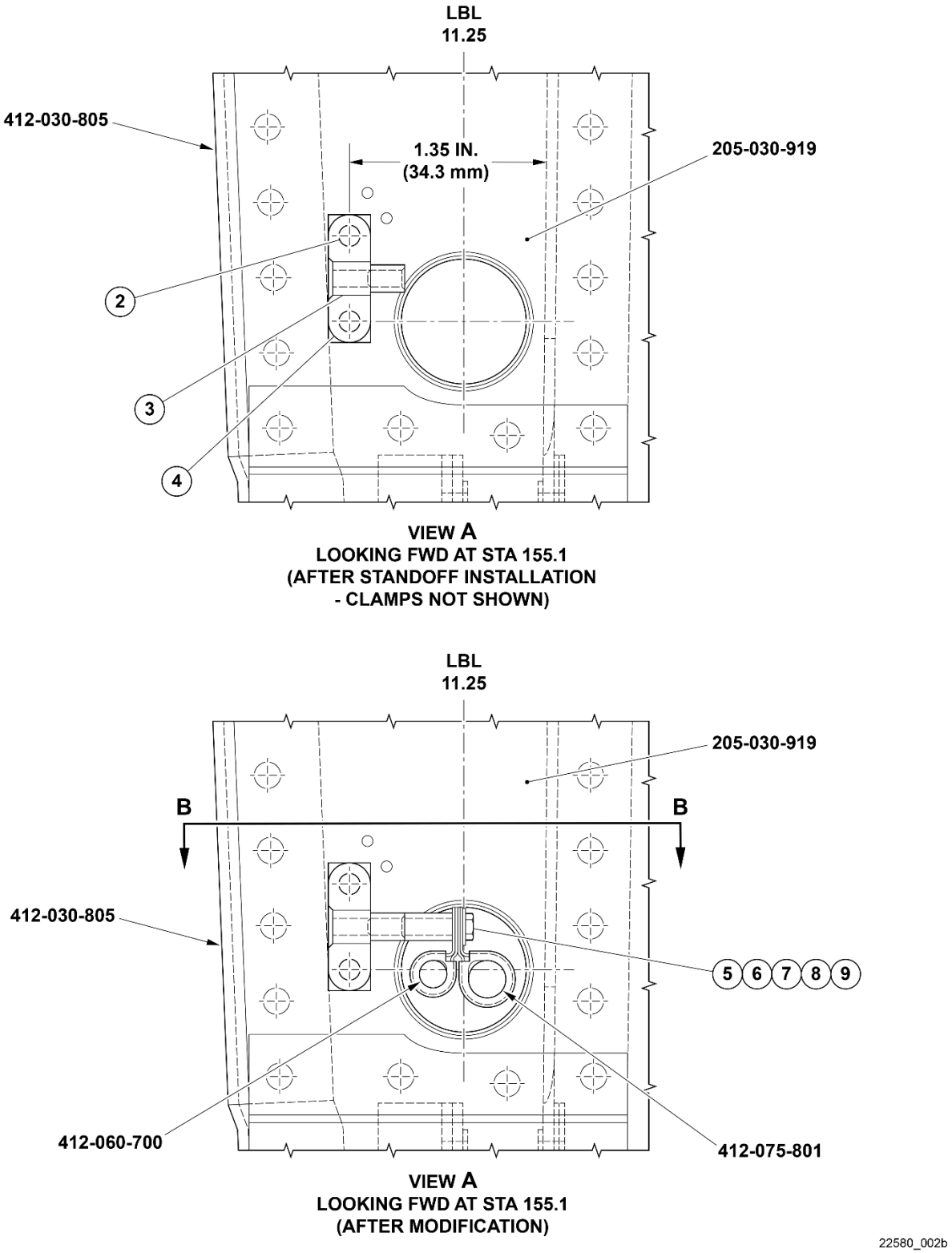

Figure 2 STA 155.1 Modification (Sheet 2 of 3)

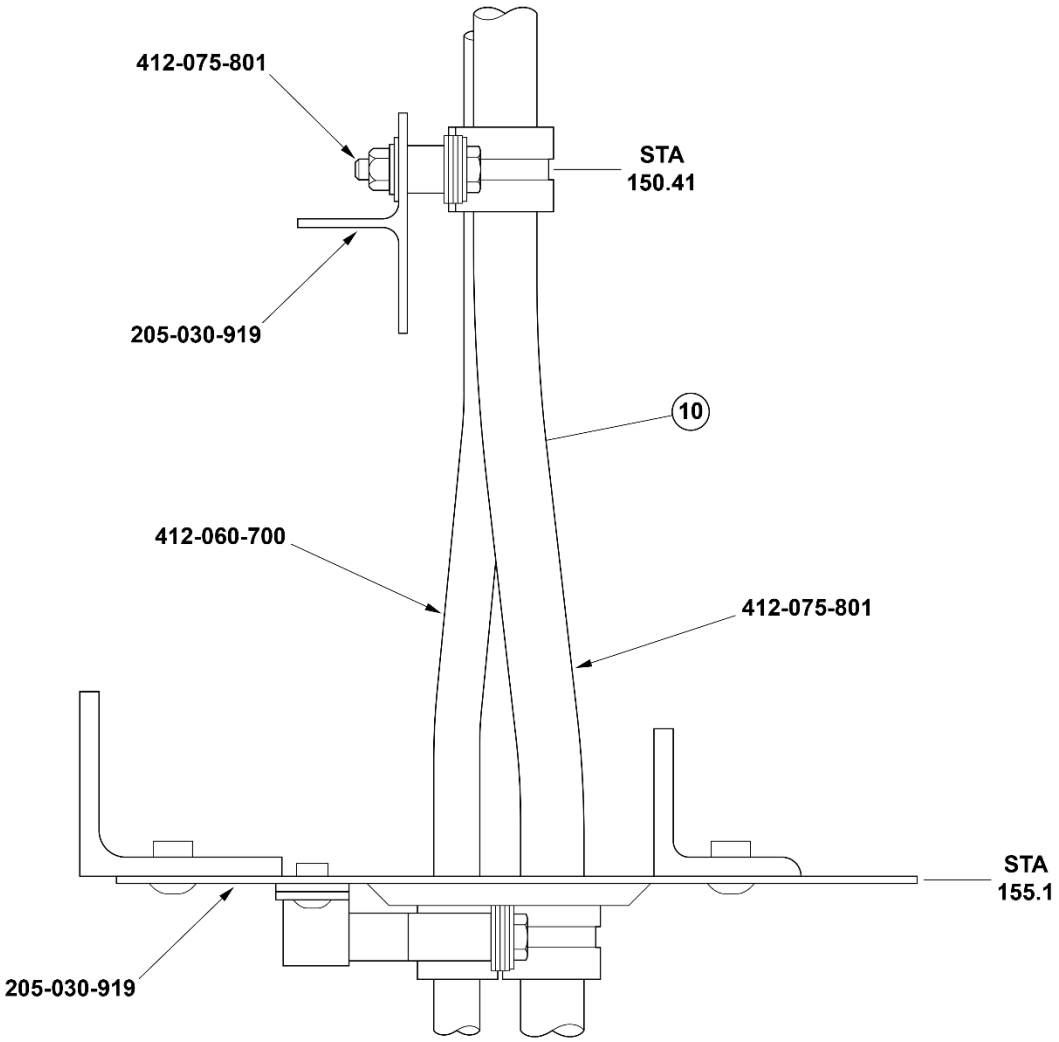

SECTION B-B

1. L-Bracket (AN743-13)
2. Rivet (NAS9301B-4-XX)
3. Standoff (120-282-3A4)
4. Shim (120-284-05D15)
5. Spacer (NAS43DD3-34N)
6. Clamp (AS21919WDG05Y)
7. Clamp (AS21919WDG07Y)
8. Washer (NAS1149D0332J)
9. Screw (NAS1801-3-18)
10. Sleeve (130-066-2-009)

22580_002c

Figure 2 STA 155.1 Modification (Sheet 3 of 3)

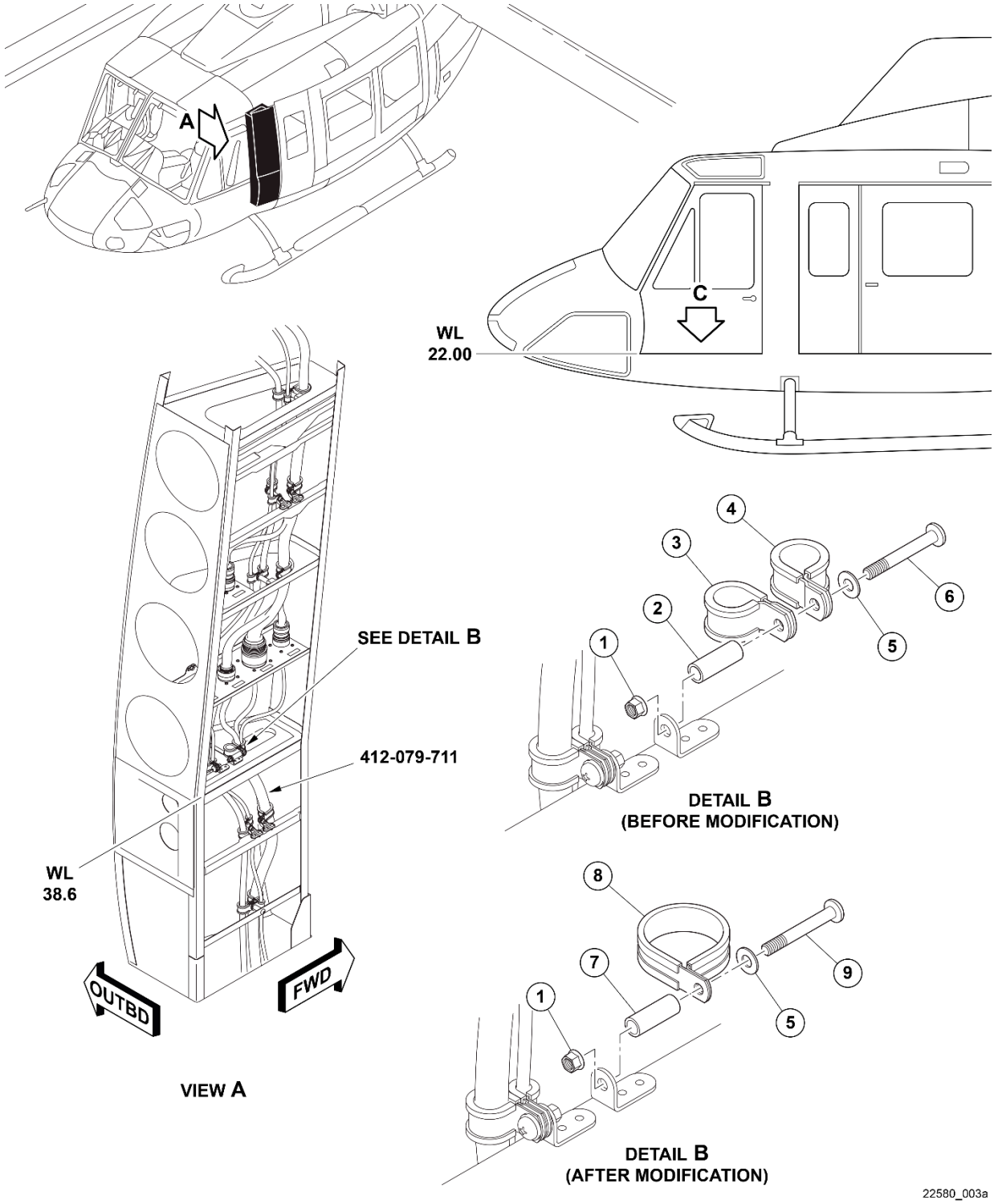

Figure 3 Door Post and Under Floor Modification (Sheet 1 of 3)

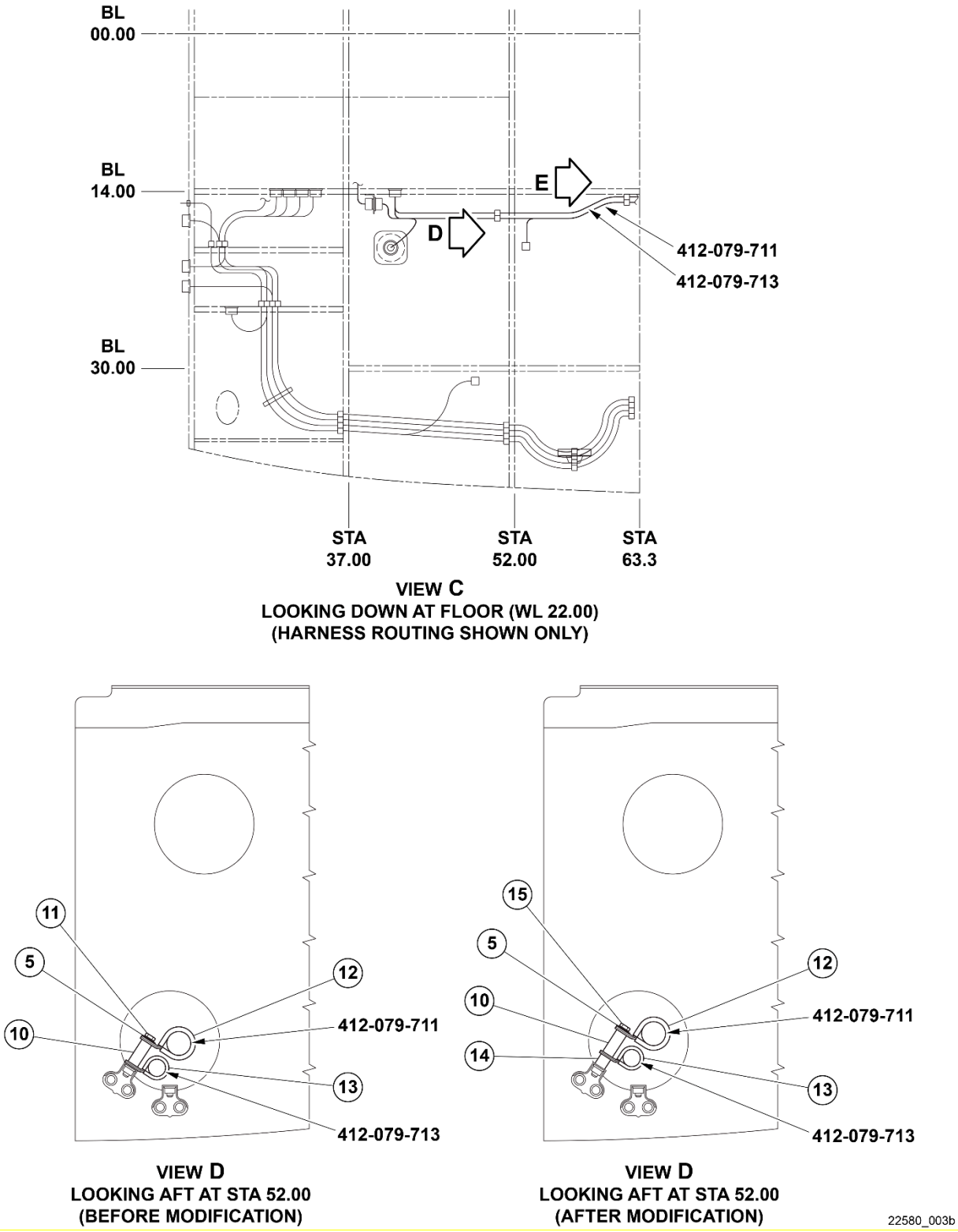

Figure 3 Door Post and Under Floor Modification (Sheet 2 of 3)

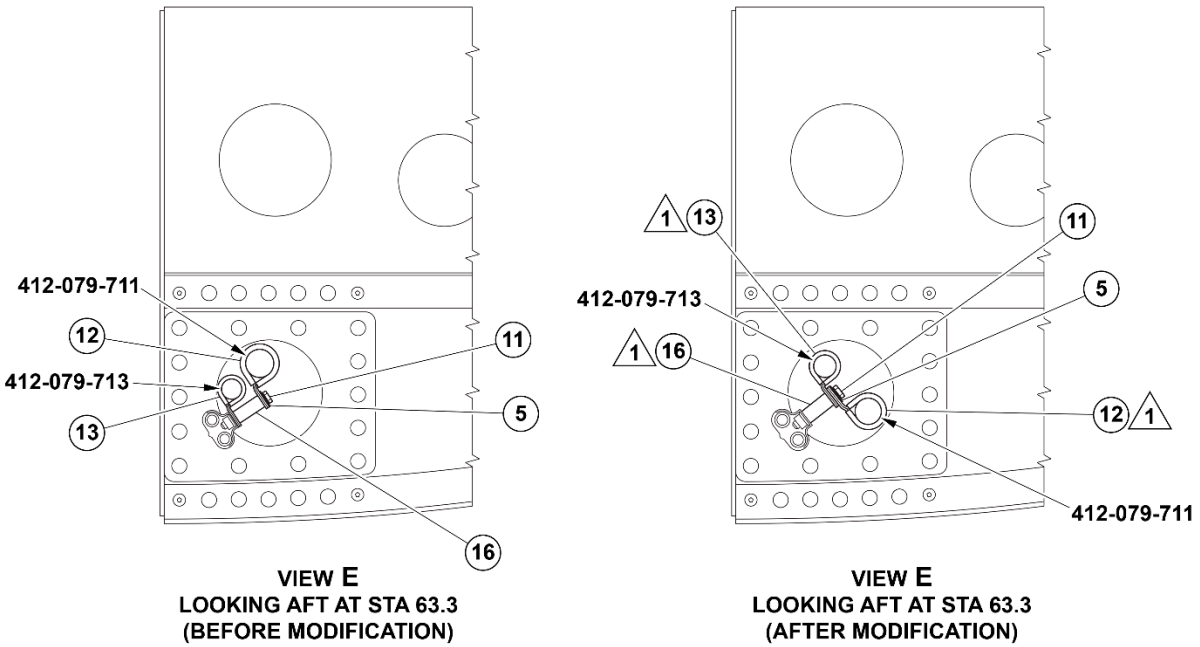

1. Nut (NAS9926-3L)
2. Spacer
3. Clamp
4. Clamp
5. Washer (NAS1149D0332J)
6. Screw
7. Spacer (NAS43DD3-32N)
8. Clamp (AS21919WDG16Y)
9. Screw (NAS1801-3-16)
10. Spacer (NAS43DD3-48N)
11. Screw (NAS1801-3-20)
12. Clamp (AS21919WDG12Y)
13. Clamp (AS21919WDG07Y)
14. Spacer (NAS43DD3-24N)
15. Screw (NAS1801-3-26)
16. Spacer (43DD3-48N)

NOTE

1. Position of clamps (12 and 13) can be reversed and spacer (16) can be replaced by NAS43DD3-40N to ensure maximum clearance with the surrounding structure.

22580_003c

Figure 3 Door Post and Under Floor Modification (Sheet 3 of 3)