A Textron Company

ALERT SERVICE BULLETIN 407-23-129

29 June 2023
Revision A, 30 October 2023

MODEL AFFECTED: **407**

SUBJECT: **ELECTRICAL HARNESSES, INSPECTION OF**

HELICOPTERS AFFECTED: **Serial numbers 54300 through 54752, 54805 through 54999, and 56300 through 56366 and 56368.**

[Serial number 56367 and 56369 and subsequent will have the intent of this bulletin accomplished prior to delivery.]

COMPLIANCE: Within the next 100 flight hours or 90 days, whichever occurs first, following the release date of Revision A of this bulletin.

DESCRIPTION:

Bell has become aware of the possibility for an electrical harness to chafe at various locations in the aircraft instrument panel area. Chafing may occur between the Primary Flight Display (PFD)/Multi-Function Display (MFD) harnesses and the Cable Harness Protection System (CHiPS) rack, and between the electrical harnesses and the shroud behind the instrument panel area.

This Alert Service Bulletin (ASB) mandates a one-time inspection of the electrical harnesses in the instrument panel area and provides instructions to improve the electrical harnesses protection adding sleeving protection, by rotating the lower GEA connector backshell by 180 degrees and adding an additional clamp.

Revision A of this bulletin provides instructions to rotate the Primary Flight Display (PFD) and Multi-Function Display (MFD) connector backshells (3160DS2P1 and 3160DS1P1) cast housing 180 degrees as well as clarifying the rotation of the GEA connector backshell.

An alternate fastener has been added for the installation of the support (160-027-460) and the sleeving part number in the Required Material section of this bulletin has been corrected.
It also provides guidance to address potential chafing conditions when kits or customizing have been added to the helicopter preventing fully accomplishing the requirements of this bulletin.

Owners/operators having accomplished the intent of the original release of this bulletin **are** required to accomplish the changes introduced in this **Revision A**.

Applicability of this bulletin to any spare part shall be determined prior to its installation on an affected helicopter.

APPROVAL:

The engineering design aspects of this bulletin are Transport Canada Civil Aviation (TCCA) approved.

CONTACT INFO:

For any questions regarding this bulletin, please contact:

Bell Product Support Engineering
Tel: 1-450-437-2862 / 1-800-363-8023 / productsupport@bellflight.com

MANPOWER:

Approximately 8 man-hours are required to complete this bulletin. This estimate is based on hands-on time and may vary with personnel and facilities available.

WARRANTY:

There is no warranty credit applicable for parts or labor associated with this bulletin.

MATERIAL:

Required Material:

The following material is required for the accomplishment of this bulletin and may be obtained through your Bell Supply Center. The kit part number **CA-407-23-129** contains the parts listed below; however, they are available in **limited** quantity, but the parts can be ordered individually.

For serial numbers 54300 through 54696, part number 2640-00104-00 sleeving will need to be ordered in addition with the kit **CA-407-23-129** to perform this ASB.

Part Number	Nomenclature	Qty (Note)
90-002-3	SELF-LOCKING NUT RIGHT ANGLE BRACKET	1
NAS1097AD4-4	RIVET	2
NAS9303B-4	RIVET (alternate)	2(3)
NAS1801-3-13	SCREW	1
NAS1149D0332J	WASHER	2
160-027-460	SUPPORT	1
NAS43DD3-20N	SPACER	1
2640-00104-00	SLEEVING	4feet/1.2m (1)(2)

NOTES:

1. Not included in **CA-407-23-129** kit. Only required for helicopters serial numbers 54300 through 54696.
2. Sleeving is sold by linear foot. Quantity required must be specified in the order.
3. Blind rivet alternate for rivet NAS1097AD4-4.

Consumable Material:

The following material is required to accomplish this bulletin, but may not require ordering, depending on the operator's consumable material stock levels. This material may be obtained through your Bell Supply Center.

Part Number	Nomenclature	Qty (Note)	Reference *
PLT2S-C702Y	Cable Tie	AR	C-292

* C-XXX numbers refer to the consumables list in the BHT-ALL-SPM, Standard Practices Manual

SPECIAL TOOLS:

None required.

WEIGHT AND BALANCE:

Not affected

ELECTRICAL LOAD DATA:

Not affected.

REFERENCES:

407-IPB Illustrated Parts Breakdown
407-MM Maintenance Manual
BHT-ELEC-SPM - Electrical Standard Practices Manual
BHT-SRM-ALL – Structural Repair Manual
CSSD-PSE-90-001 - Chafing Control Guide

PUBLICATIONS AFFECTED:

407-IPB Illustrated Parts Breakdown

ACCOMPLISHMENT INSTRUCTIONS:

-NOTE-

Installation of additional kits or customizing may require different routing of the harnesses which may prevent accomplishment of all the requirements of this ASB. In such cases, owners/operators should refer to the Chafing Control Guide (CSSD-PSE-90-001) and Electrical Standard Practice Manual (BHT-ELEC-SPM) to prevent any potential chafing conditions.
If chafing prevention has been incorporated but are slightly different from the requirements of this ASB, they are considered as meeting the intent of this bulletin. This does not apply to the installation of the sleeving (2640-00104-00) which is considered a mandatory requirement.

1. Prepare the helicopter for maintenance.

2. Make sure all electrical power is removed from helicopter.

WARNING

OBEY ALL THE SAFETY PRECAUTIONS WHEN YOU DO MAINTENANCE ON OR NEAR ELECTRICAL/ELECTRONIC EQUIPMENT (DMC-407-A-96-00-00-00A-012A-A).

3. Remove the Primary Flight Display (PFD) and Multi-Function Display (MFD) (DMC-407-A-95-13-05-00A-520A-A).

4. Remove the Engine Airframe Unit (GEA) (DMC-407-A-95-64-04-00A-520A-A).

5. Gain access to the electrical harnesses in instrument panel area by removing the right lower and upper console panel followed by the left upper, right upper, and right lower shroud assembly. (DMC-407-A-95-13-03-00A-520A-A).

6. Do a detailed visual inspection of the electrical harnesses behind the instrument panel area for any chafing. Pay attention to the electrical harnesses at the Cable Harness Protection System (CHiPS) rack and around shroud area.

7. Repair damaged wires/bundles and identify/address the source of the chafing. Refer to Electrical Standard Practices Manual (BHT-ELEC-SPM) and Chafing Control Guide (CSSD-PSE-90-001) for additional information.

-NOTE-

The sleeve (2640-00104-00) length shall fully cover the wire bundle in the flexible chain link conduit of the CHiPS rack.

8. For helicopters serial numbers 54300 through 54696 without sleeve installed on the wire bundle in the flexible chain link conduit of CHiPS rack, cut the sleeve to the correct length and install it to cover the wire bundle into the flexible chain link conduit for both CHiPS rack (BHT-ELEC-SPM).

CAUTION

Disconnect the Configuration Module before rotating the GEA backshell housing.

-NOTE-

Helicopters serial number 56358 and subsequent have the lower GEA connector backshell rotated.

9. Rotate the lower GEA connector (7320A1P1) backshell cast housing by 180 degrees. The shield block and grounding screw heads should face left hand side of helicopter after rotation (Figure 2).

-NOTE-

The GEA connector (7320A1P1) on helicopter serial numbers 54300 through 54566 and 54568 through 54804 has a configuration module in the backshell cast housing.

10. For GEA connectors without the configuration module, perform steps 17 a, c, d, e, and g to rotate the connector backshell of the GEA.

11. For GEA connectors with a configuration module, perform steps 17 a through g to rotate the connector backshell of the GEA.

-NOTE-

Install the rivets with manufactured head on the bottom side of support 407-031-202-119. Helicopters serial 56358 and subsequent have the support installed.

12. Drill two rivet holes on support 407-031-202-119 (Figure 1) using No.30 drill bit. Countersink and deburr each hole and install the self-locking nut right angle bracket (1) with rivets (2) (BHT-SRM-ALL).

13. Install the support (3) and spacer (4) with screw (5) and washers (6).

14. Secure the wire harness W101 (7) with cable tie on the support (3).

15. Install the left upper, right upper and right lower shroud assembly followed by the right upper and lower console panel (DMC-407-A-95-13-03-00A-720A-A).

16. Install the GEA unit (DMC-407-A-95-64-04-00A-720A-A).

CAUTION

Disconnect the Configuration Module before rotating the PFD backshell housing.

17. To prevent fretting of the grounding screw heads against the Chips rack, the backshell cast housing of the PFD connector (3160DS2P1) and MFD connector (3160DS1P1) backshells must be rotated 180 degrees. The shield block and grounding screw heads should face on the left hand side of helicopter after rotation (Figure 3). Rotate the PFD connector (3160DS2P1) backshell cast housing as follows: (Figure 3).

-NOTE-

Helicopters serial numbers 56337 through 56366 and 56368 may already have the PFD and MFD connector backshells rotated. Confirm the orientation of the grounding screw heads. If the grounding screw heads are facing on the left hand side of the helicopter, go to step 19.

a. Remove screws (2) from lid (1) and set aside.

b. Carefully remove connector (4) from the Configuration Module (5). Pay particular attention when handling the 4-Conductor Harness (3).

c. Remove the screws (7) securing the strain relief (6) and set aside.

d. Carefully rotate the backshell cast housing (9) 180 degrees. The grounding screws on the shield block (8) should face on the left hand side of helicopter after rotation.

e. Re-position the connector (10) onto the backshell cast housing (9) and install the strain relief (6) and screws (7).

f. Carefully insert the connector (4) into the Configuration Module (5).

g. Install the lid (1) with screws (2).

-NOTE-

The MFD connector (3160DS1P1) does not have a Configuration Module.

18. Rotate the MFD connector (3160DS1P1) backshell cast housing by 180 degrees as per steps 17 a, c, d, e, and g. The shield block and grounding screw heads should face left hand side of helicopter after rotation (Figure 3).

19. Install the PFD and MFD (DMC-407-A-95-13-05-00A-720A-A).

20. Make an entry in the helicopter logbook and historical service records indicating compliance with this Alert Service Bulletin.

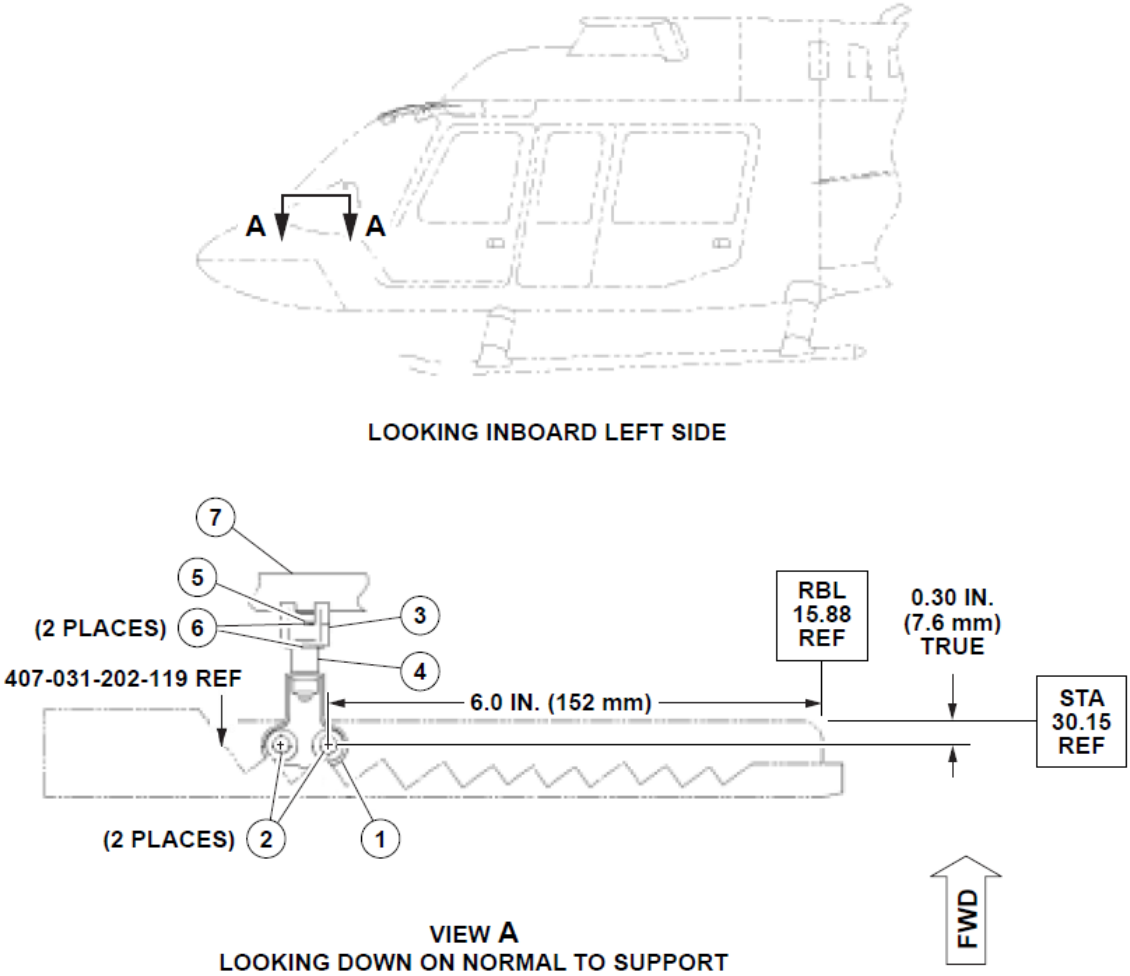

1. **Self-Locking Nut, Right Angle Bracket (90-002-3)**
2. **Rivet (NAS1097AD4-4) / Rivet, Blind (Alternate, NAS9303B-4)**
3. **Support (160-027-460)**
4. **Spacer (NAS43DD3-20N)**
5. **Screw (NAS1801-3-13)**
6. **Washer (NAS1149D0332J)**
7. **Wire Harness W101 (Ref)**

Figure 1 – Clamp Installation (Page 1 of 2)

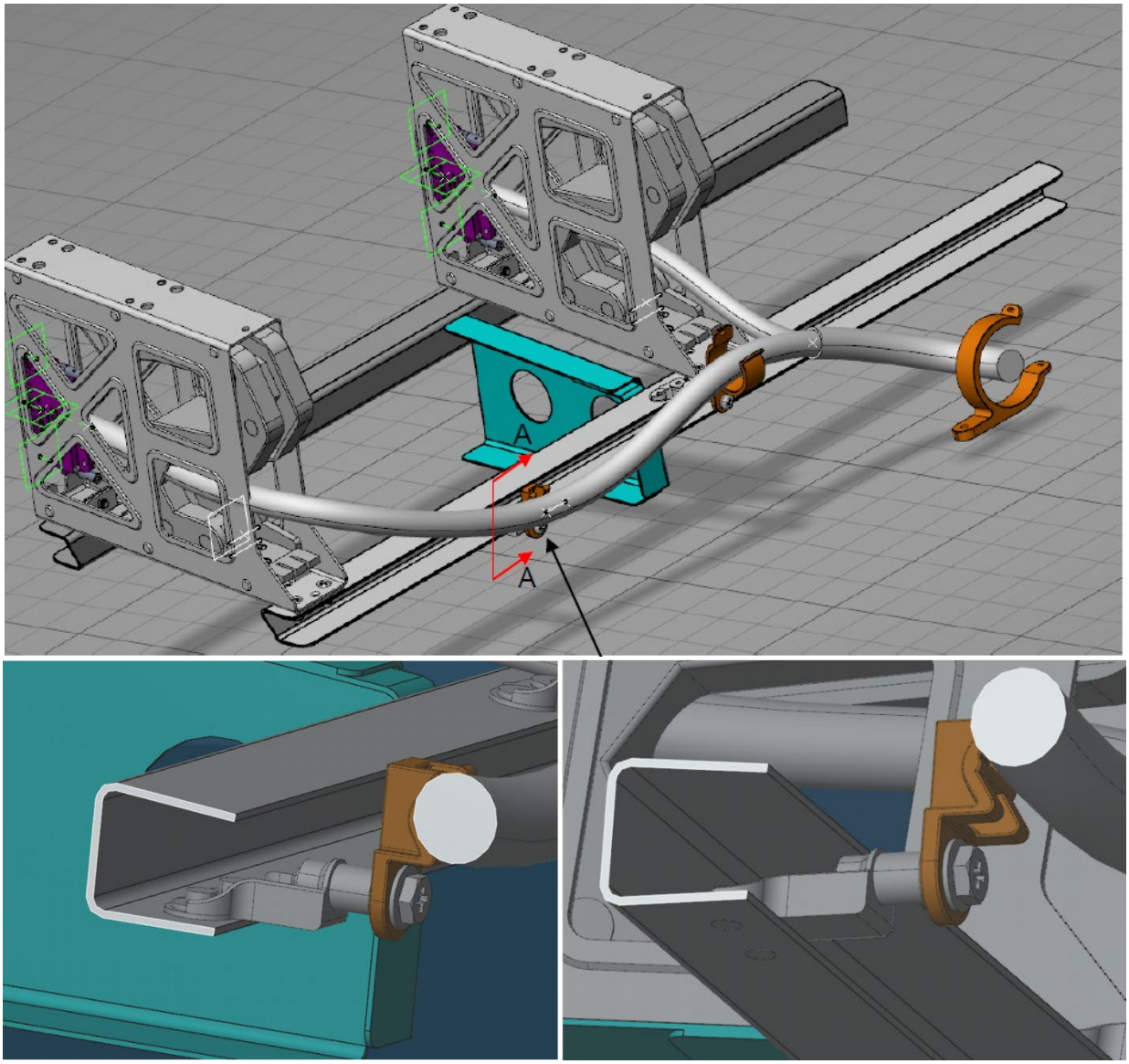

Figure 1 – Clamp Installation (Page 2 of 2)

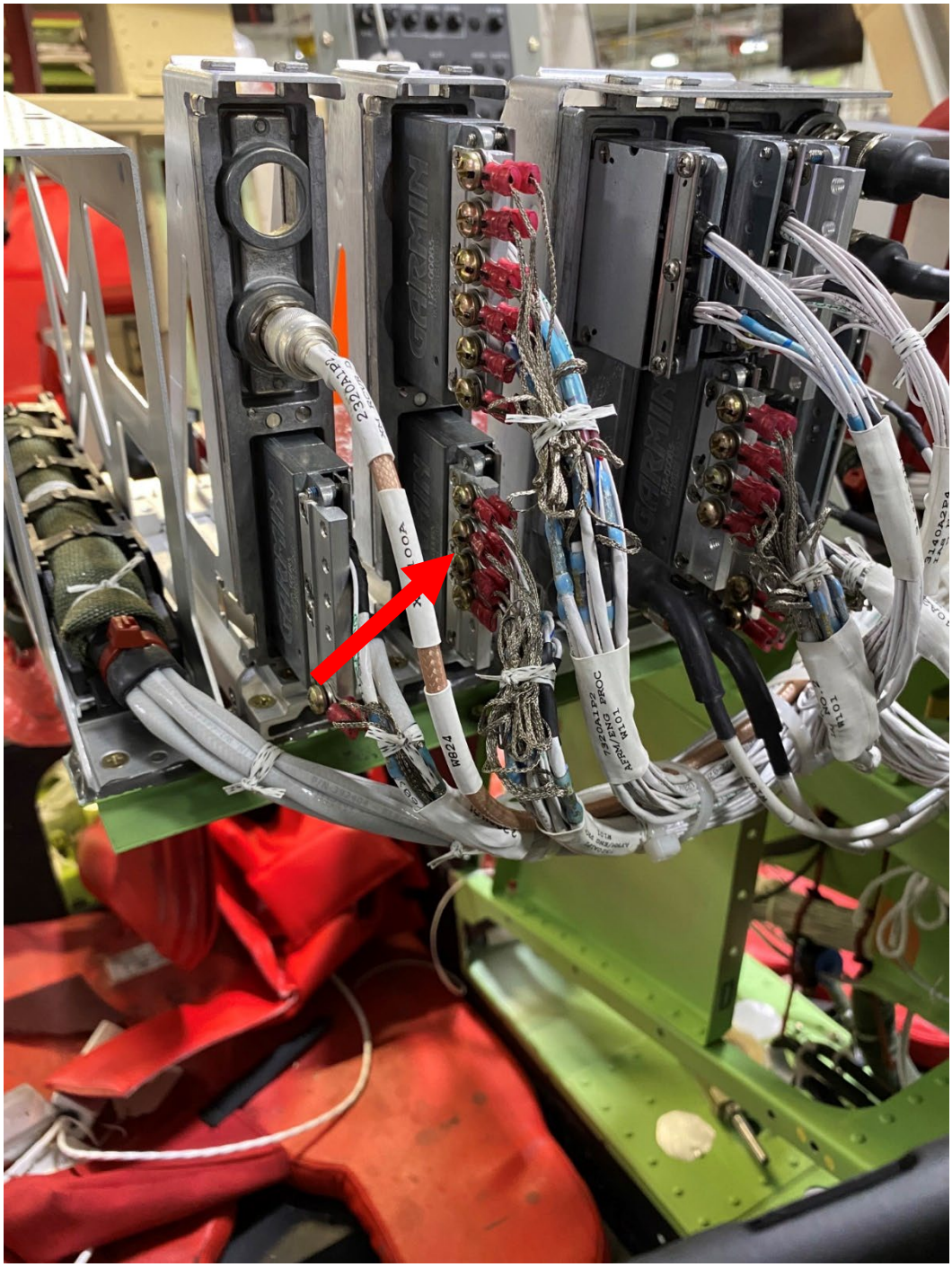

Figure 2 (Sheet 1 of 3) – GEA backshell rotation
Pre-Rotation of Connector Backshell

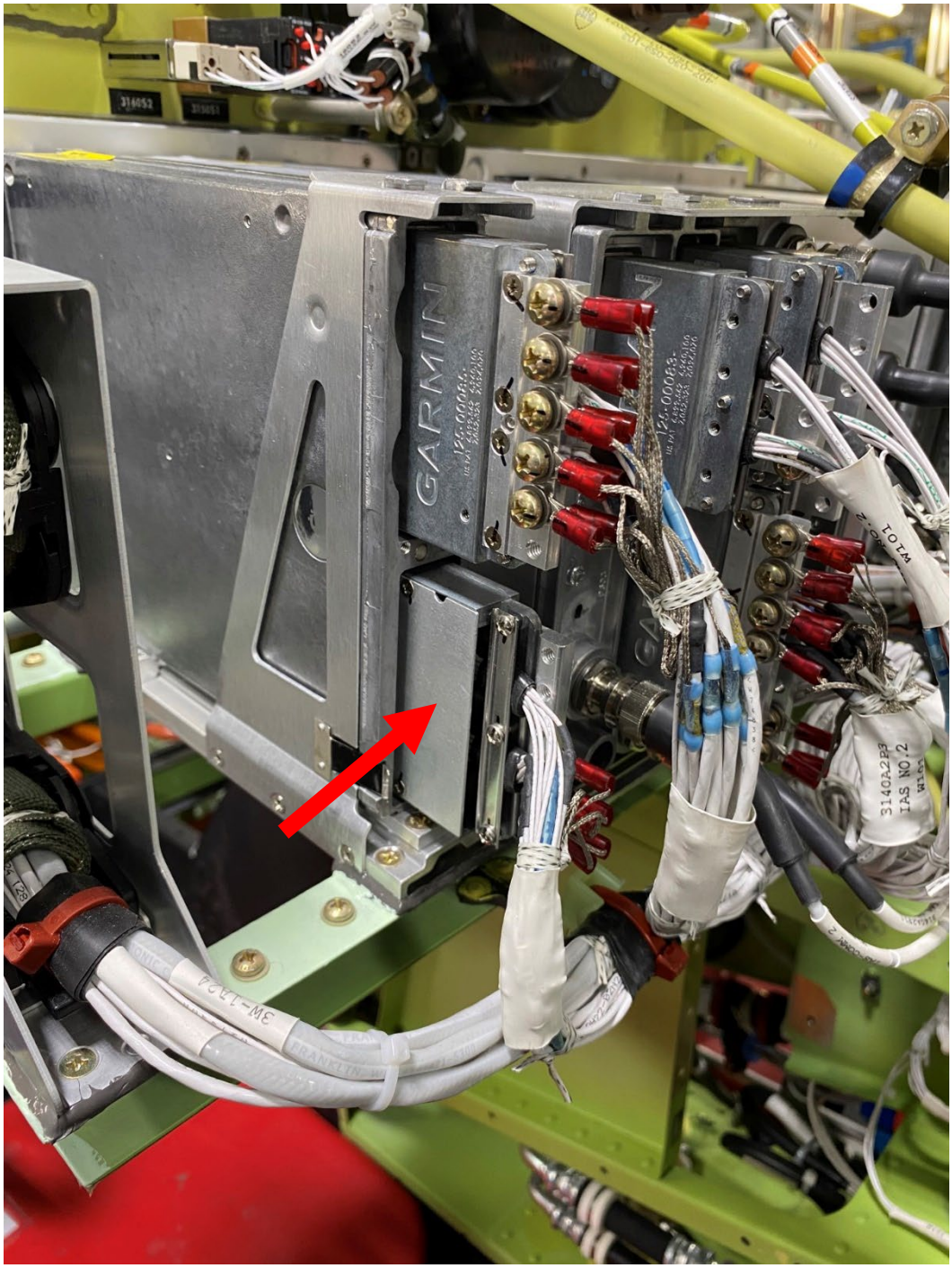

Figure 2 (Sheet 2 of 3) – GEA backshell rotation
Post-Rotation of Connector Backshell

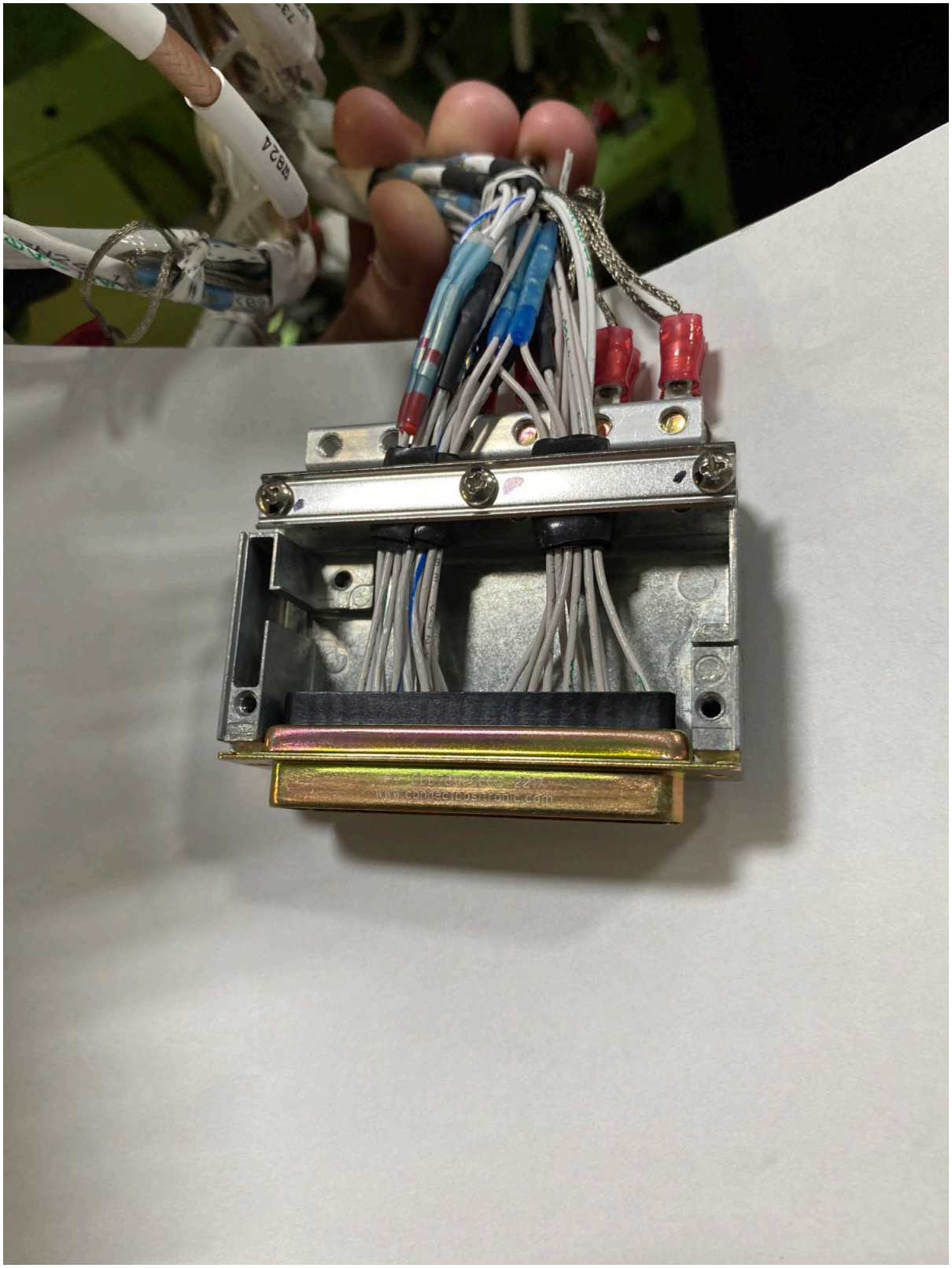

Figure 2 (Sheet 3 of 3) – Example of GEA and MFD Connector (Lid Removed) (GEA Connector shown)

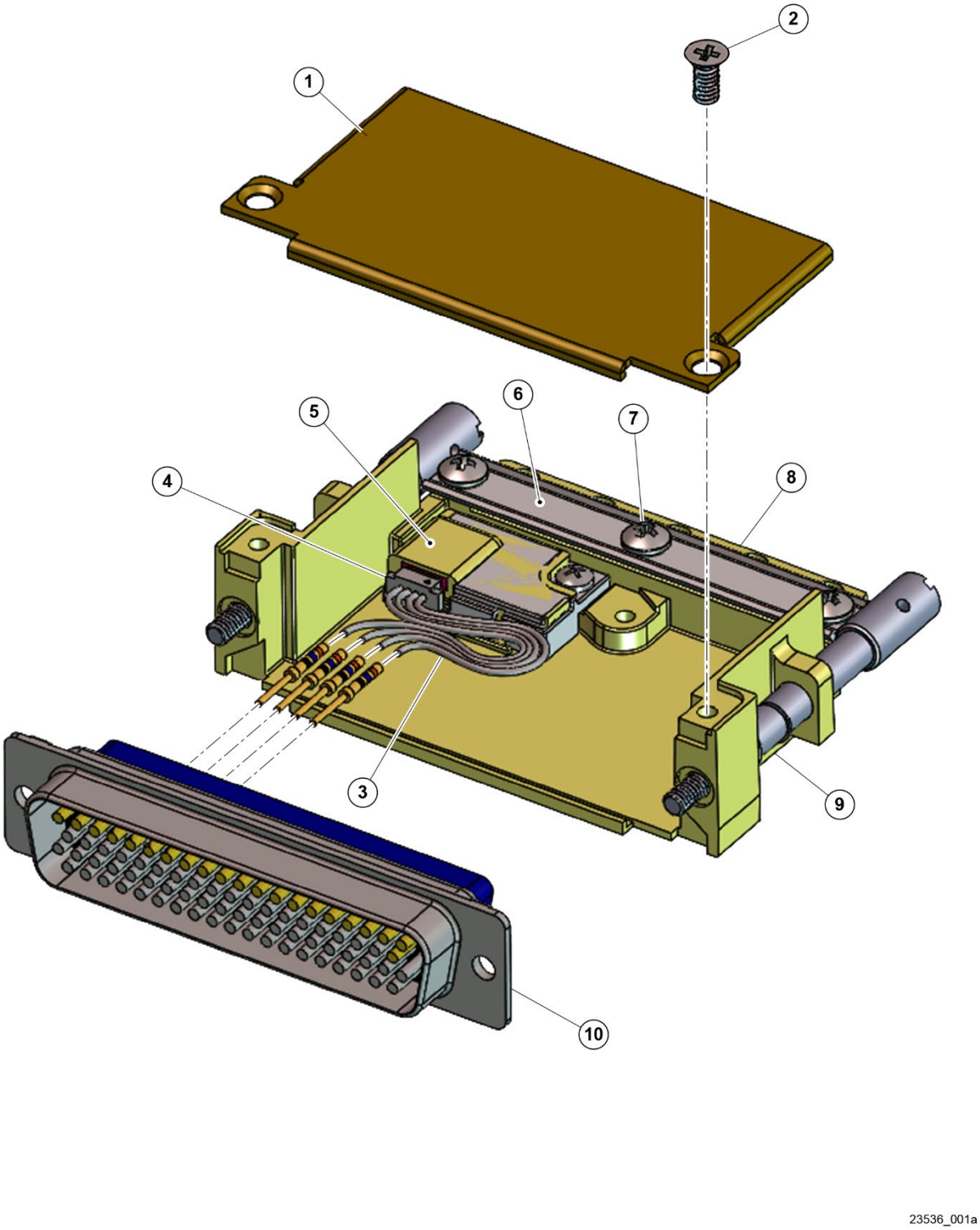

Figure 3 (Sheet 1 of 2) – PFD Connector 3160DS2P1
(Exploded View – Additional wiring removed for clarity)
Pre-Rotation of Connector Backshell

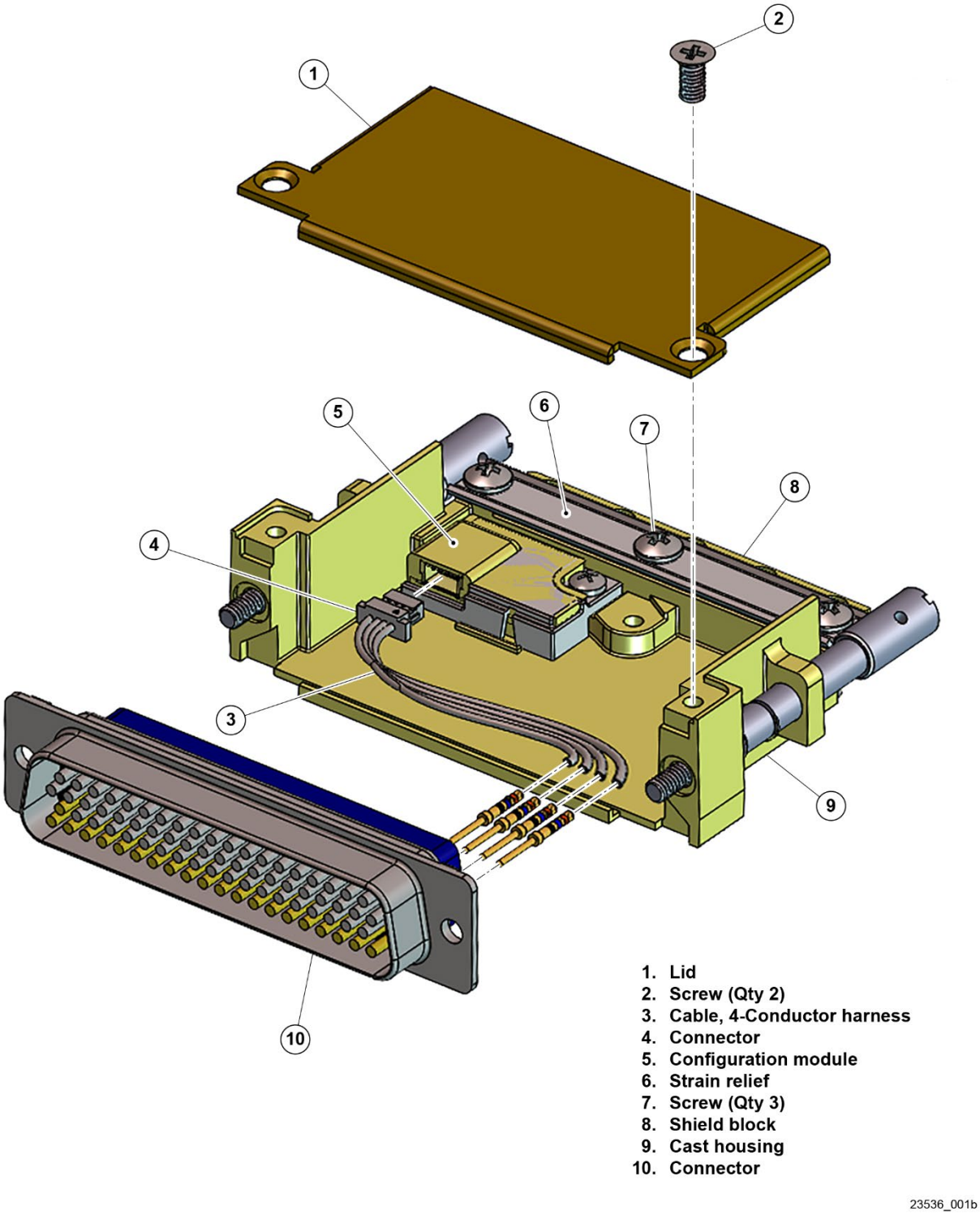

Figure 3 (Sheet 2 of 2) – PFD Connector 3160DS2P1
(Exploded View – Additional wiring removed for clarity)
Post-Rotation of Connector Backshell

Pre-rotation of connector backshell

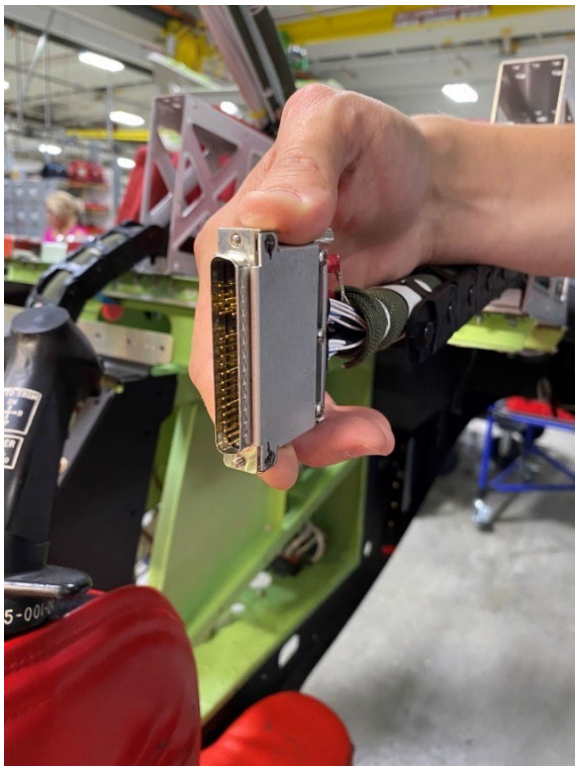

Post-rotation of connector backshell

Figure 4 – Pre and Post PFD and MFD Connector Backshell Rotation