BHT-230-MM-1

Bell MODEL 230

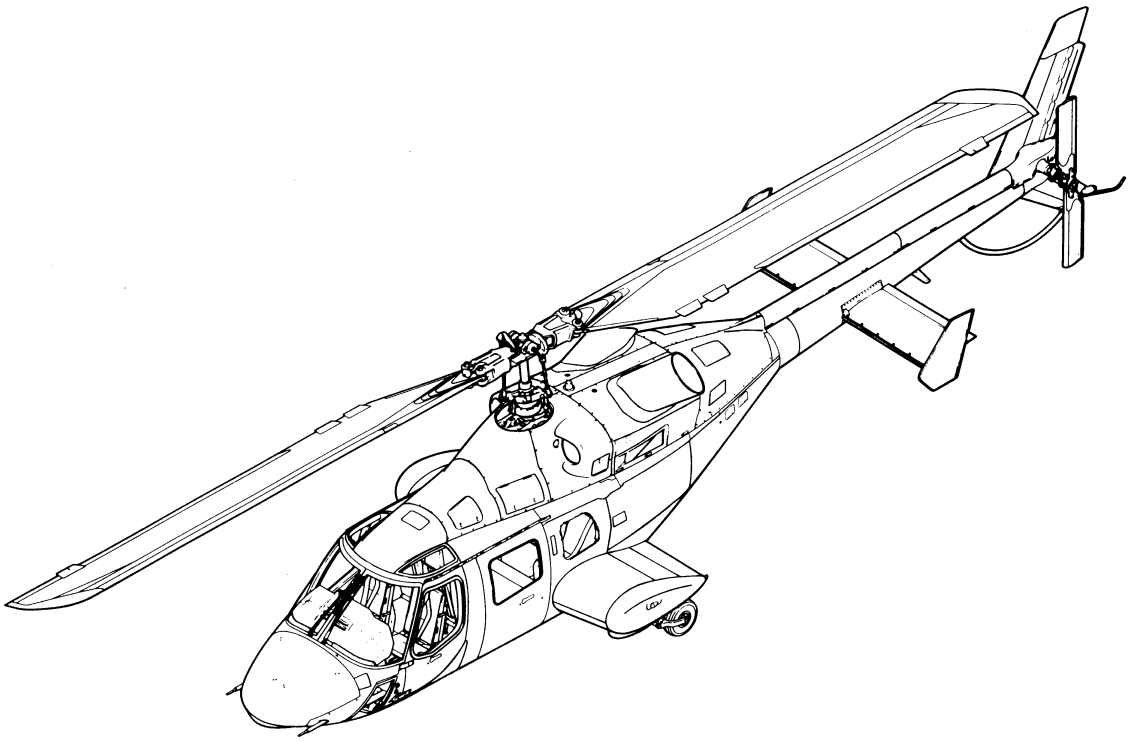

MAINTENANCE MANUAL

VOLUME 1

GENERAL INFORMATION

NOTICE

The instructions set forth in this manual, as supplemented or modified by Alert Service Bulletins (ASB) or other directions issued by Bell Textron Inc. and Airworthiness Directives (AD) issued by the applicable regulatory agencies, shall be strictly followed.

BELL

POST OFFICE BOX 482 • FORT WORTH, TEXAS 76101

BHT-230-MM-1

Bell MODEL 230

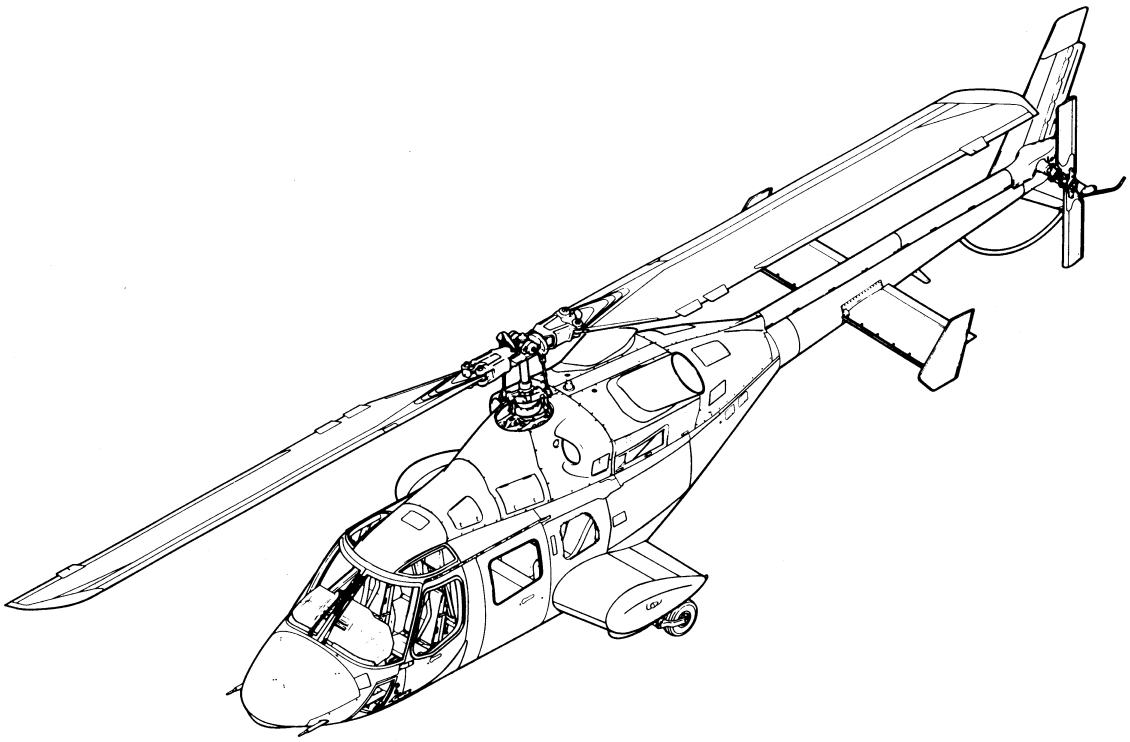

MAINTENANCE MANUAL

VOLUME 1

GENERAL INFORMATION

NOTICE

The instructions set forth in this manual, as supplemented or modified by Alert Service Bulletins (ASB) or other directions issued by Bell Textron Inc. and Airworthiness Directives (AD) issued by the applicable regulatory agencies, shall be strictly followed.

COPYRIGHT NOTICE
COPYRIGHT 2020
BELL TEXTRON INC. AND
BELL TEXTRON CANADA LIMITED.

ALL RIGHTS RESERVED

POST OFFICE BOX 482 • FORT WORTH, TEXAS 76101

12 MARCH 1992

REVISION 17 — 2 SEPTEMBER 2020

PROPRIETARY RIGHTS NOTICE

These data are proprietary to Bell Textron Inc. Disclosure, reproduction, or use of these data for any purpose other than helicopter operation or maintenance is forbidden without prior written authorization from Bell Textron Inc.

DESTINATION CONTROL STATEMENT

WARNING — This document contains technical data whose export is restricted by the Arms Export Control Act (Title 22, U.S.C., Sec 2751, et. seq.) or the Export Administration Act of 1979, as amended, Title 50, U.S.C., App. 2401 et. seq. Violations of these export laws are subject to severe criminal penalties. Disseminate in accordance with provisions of DoD Directive 5230.25.

WARNING

THIS MANUAL APPLIES ONLY TO HELICOPTERS AND COMPONENTS MAINTAINED IN ACCORDANCE WITH BELL TEXTRON INC. APPROVED PROCEDURES USING BELL APPROVED PARTS.

ALL INSPECTION, REPAIR AND OVERHAUL PROCEDURES PUBLISHED BY BELL, INCLUDING PART RETIREMENT LIFE, ARE BASED SOLELY ON THE USE OF BELL PARTS THAT HAVE BEEN MAINTAINED USING BELL APPROVED DATA. THE DATA PUBLISHED HEREIN OR OTHERWISE SUPPLIED BY BELL IS NOT APPLICABLE TO NON-BELL PARTS OR PARTS THAT HAVE BEEN REPAIRED USING DATA AND/OR PROCESSES NOT APPROVED BY BELL.

BELL IS NOT RESPONSIBLE FOR ANY PART OTHER THAN THOSE THAT IT HAS APPROVED.

BEFORE PERFORMING ANY PROCEDURE CONTAINED IN THIS MANUAL YOU MUST INSPECT THE AFFECTED PARTS AND RECORDS FOR EVIDENCE OF ANY MANUFACTURE, REPAIR, REWORK OR USE OF A PROCESS NOT APPROVED BY BELL.

IF YOU IDENTIFY OR SUSPECT THE USE OF PARTS NOT AUTHORIZED BY BELL, EITHER REMOVE THE AFFECTED ITEM FROM THE AIRCRAFT OR OBTAIN INSTRUCTIONS FOR CONTINUED AIRWORTHINESS FROM THE MANUFACTURER OR THE ORGANIZATION THAT APPROVED THE REPAIR.

CUSTOMER SUPPORT AND SERVICES

Flying smart means that no matter where you are, or what time it is, you can make a call and get additional information, clarification, or advice on a technical or operational issue concerning your helicopter or information contained in our Technical Publications. Product Support Engineering (PSE) is just a phone call away and may be contacted as follows:

Commercial Models

Phone: 450-437-2862 or 800-363-8023 (U.S./Canada)

Fax: 450-433-0272

E-mail: productsupport@bellflight.com

Model 210, HUEY II and All Bell's Active and Surplus Military Medium Helicopter Models

Phone: 817-280-3548

Fax: 817-280-2635

E-mail: mts-medium@bellflight.com

Model OH-58, TH-67, TH-57, Both Active and Surplus Military

Phone: 817-280-3548

Fax: 817-280-2635

E-mail: mts-light@bellflight.com

For additional information on Customer Support and Services as well as Product Support Engineering (PSE) and your local Customer Service Engineering (CSE) network, please access https://www.bellflight.com/support.

LOG OF REVISIONS

Insert latest revision pages and dispose of superseded ones.

On a revised page, the text and/or illustration affected by the latest revision is shown by a vertical line. A revised page with only a vertical line next to the page number indicates that text has shifted or that non-technical correction(s) were made on that page.

Original	0	12 MAR 92
Revision	1	21 AUG 92
Revision	2	20 JAN 93
Revision	3	02 FEB 93
Revision	4	15 JUL 93
Revision	5	22 DEC 93
Revision	6	04 AUG 95
Revision	7	31 MAR 98
Revision	8	08 MAR 99
Revision	9	03 DEC 99
Revision	10	01 JUL 00
Revision	11	15 AUG 02
Revision	12	13 NOV 03
Revision	13	08 SEP 06
Revision	14	15 DEC 06
Revision	15	12 SEP 08
Revision	16	09 SEP 11
Revision	17	02 SEP 20

LOG OF PAGES

Page No.	Rev No.
VOLUME 1	
Cover	17
Title	17
PN	17
Warning	17
CSS	17
A – J	17
Help	13
Customer Feedback	17
Helicopter Sales Notice	17
Warranty 1 – 3	17
BR	16
TR	13
i/ii	13
Chapter 1 — MM	
i/ii	8
1 – 2	6
3	4
4 – 6	8
7/8	8
9/10	8
11 – 14	8
Index 1 – 8 (Deleted)	16
Index 9/10 (Deleted)	16
Part Number 1 – 186	9
Part Number 187/188	9
Ref. Des. 1 – 12	7
VOLUME 2	
Cover	17
Title	17
PN	17
Chapter 4 — MM	
i/ii	7
1 – 2	7
Chapter 5 — MM	
1	17
2 – 6	16
7/8	16
9 – 38	16
39/40	16
41 – 44	16
45/46	16
47 – 48	16
49/50	16
51 – 52	16
53/54	16
55 – 58	16
59/60	16
61 – 62	16
63/64	16
65 – 74	16
75/76	16
77 – 82	16
83/84	16
85 – 88	16
89/90	16
91 – 94	16
95/96	16
97 – 98	16
99/100	16
101/102	16
103 – 104	16
105/106	16
107/108	16
109/110	16
111/112	17
113/114	16
115/116	16
117/118	16
119/120	16
121 – 122	16
123/124	16
125/126	16
127/128	16
129 – 134	16
135/136	16
137 – 142	16
143/144	16
145 – 148	16
149/150	16
151 – 154	16
155/156	16
157 – 158	16
159/160	16
161 – 164	16
165/166	16
167 – 168	16
Chapter 6 — MM	
i/ii	0
1 – 2	0
3/4	0
5 – 6	4
Chapter 7 — MM	
i/ii	4

LOG OF PAGES (CONT)

Page No.	Rev No.
1 – 2	6
3 – 6	4
Chapter 8 — MM	
i/ii	0
1 – 3	0
4 – 9	4
10 – 12	0
13	4
14 – 16	0
17	4
18	0
19 – 24	4
Chapter 8 — IPB	
1	0
2	4
3/4	4
Chapter 9 — MM	
i/ii	0
1	0
2	4
3 – 4	0
5/6	0
7	4
8 – 10	0
11/12	0
Chapter 9 — IPB	
1 – 2	0
3/4	0
Chapter 10 — MM	
i – ii	0
1 – 10	0
Chapter 10 — IPB	
1 – 2	0
3/4	0
Chapter 11 — MM	
i/ii	0
1	0
2 – 4	4
5	0
6	6
7	4
8 – 9	6
10 – 12	4
13 – 19	0
20 – 22	4
23/24	4
Chapter 11 — IPB	
1	0
2 – 3	4
4	0
5/6	0
Chapter 12 — MM	
i – ii	16
1 – 5	16
6 – 14	0
15 – 16	4
17	12
18 – 19	0
20	16
21 – 22	0
23 – 25	12
26	16
27/28	16
VOLUME 3	
Cover	0
Title	7
PN	0
Chapter 21 — MM	
i	0
ii	4
iii/iv	4
1 – 2	0
3/4	0
5 – 12	0
13	6
14	0
15	4
16 – 19	0
20	6
20A – 20B	6
21 – 22	6
23 – 24	4
25/26	4
Chapter 21 — IPB	
1	6
2	0
2A – 2B	7
3 – 5	7
6	0
7/8	4
9	0
10	4
11/12	4
13	4
14	6
15/16	6
17	6
18 – 20	0
21/22	4
23	0
24	6
24A/24B	6
25	6
26	4
27/28	4
Chapter 25 — MM	
i – ii	0
iii – iv	6
1 – 2	0
3/4	0
5 – 6	0
7/8	0
9	0
10 – 11	4
12 – 13	0
14	6
15	4
16	6
17 – 18	4
19	6
20 – 22	0
23/24	0
Chapter 25 — IPB	
1	6
2 – 3	4
4 – 5	6
6	4
7/8	6
9 – 14	6
15/16	6
17 – 18	6
19/20	6
21	6

Export Classification C, ECCN EAR99

LOG OF PAGES (CONT)

Page No.	Rev No.
22	0
23 – 24	6
24A – 24B	6
25 – 26	6
26A/26B	6
27 – 28	6
28A – 28B	6
29	6
30	0
31/32	4
33	0
34	6
35/36	6
37 – 38	6
39/40	6
41-44	6
Chapter 26 — MM	
i – ii	0
1/2	0
3 – 6	0
7/8	0
9	4
10 – 12	0
Chapter 26 — IPB	
1 – 2	0
3 – 4	4
5	7
6	0
7/8	0
VOLUME 4	
Cover	0
Title	7
PN	0
Chapter 28 — MM	
i – ii	0
iii/iv	0
1 – 21	0
22	4
23 – 25	0
26	4
27 – 28	0
29/30	0
31 – 35	0
36 – 37	4
38	0
Chapter 28 — IPB	
1	6
2	7
3/4	7
5	7
6	6
7 – 8	7
8A/8B	7
9	7
10	6
11 – 12	7
13/14	7
Chapter 29 — MM	
i – ii	0
iii/iv	0
1	0
2	6
3 – 16	0
17/18	0
19 – 20	6
20A/20B	6
21 – 22	0
23	4
24 – 32	0
33	4
34 – 36	0
Chapter 29 — IPB	
1 – 2	0
3 – 4	7
5/6	7
7 – 8	7
8A/8B	7
9	7
10	0
11/12	7
13 – 14	7
14A/14B	7
15 – 16	7
17/18	7
19 – 22	7
22A/22B	7
23 – 24	7
24A/24B	7
25	7
26	4
27 – 28	7
28A/28B	7
29	7
30	0
31 – 33	7
34	0
34A/34B	7
35 – 38	7
38A – 38B	7
39 – 42	7
43/44	7
VOLUME 5	
Cover	16
Title	16
PN	16
Chapter 30 — MM	
i/ii	0
1 – 4	0
Chapter 30 — IPB	
1	0
2 – 3	4
4 – 6	0
7/8	0
Chapter 32 — MM	
i	16
ii	6
iii/iv	4
1 – 7	0
8	4
9	0
10	4
11 – 14	0
15/16	4
17 – 22	0
23 – 24	4
25 – 27	0
28	4
29	0
30	4
31 – 32	0
33	6
34	0
35	16
36 – 40	0
41	4
42	6
43 – 49	0

LOG OF PAGES (CONT)

Page No.	Rev No.
50	6
50A/50B	6
51	6
52	0
53	6
54	0
55/56	0
Chapter 32 — IPB	
1	4
2	7
2A/2B	7
3 – 4	7
5/6	7
7	7
8	0
8A/8B	7
9	7
10	4
10A/10B	7
11	7
12	4
12A/12B	7
13	7
14	4
15 – 17	7
18	4
19 – 20	7
21/22	7
Chapter 52 — MM	
i – ii	0
iii/iv	6
1	0
2	4
3 – 8	0
9	6
10 – 17	0
18	4
19 – 26	0
27/28	0
29 – 32	0
33	4
34 – 42	0
43	4
44	0
Chapter 52 — IPB	
1	6
2	7
2A/2B	7
3 – 4	7
4A/4B	7
5	7
6	6
7/8	7
9	7
10	6
11/12	7
13	7
14	0
14A/14B	7
15	7
16	0
17 – 18	7
19/20	7
21 – 23	7
24	0
25 – 26	7
Chapter 53 — MM	
i – ii	10
iii/iv	10
1 – 14	0
15/16	0
17 – 30	10
31/32	10
Chapter 53 — IPB	
1	6
2 – 4	7
5/6	7
7 – 8	7
9/10	7
11	7
12 – 13	4
14	0
15/16	0
17	0
18	6
19 – 24	7
24A – 24B	7
25 – 29	7
30	6
31	7
32	0
33/34	0
35	0
36	7
37/38	7
39	7
40 – 42	0
43/44	7
45	7
46	0
47/48	7
49	7
50 – 51	0
52	7
53/54	7
55	7
56	0
56A/56B	7
57	7
58	0
59	7
60 – 61	4
62	6
62A/62B	7
63	7
64	4
65	0
66	4
67	0
68	4
69 – 71	0
72	4
73/74	7
75	7
76	4
77/78	0
79	4
80	0
81/82	0
83	0
84 – 89	6
90 – 91	0
92	7
93/94	7
95	7
96 – 97	6
98 – 100	7
101/102	7
103	7
104	0
105 – 107	7
108 – 114	6

Export Classification C, ECCN EAR99

LOG OF PAGES (CONT)

Page No.	Rev No.
114A/114B	6
115 – 116	6
117/118	6
119	6
120	7
120A/120B	7
121 – 122	7
123/124	7
125 – 126	7
126A/126B	7
127	7
128	6
129/130	7
131	7
132	6
133/134	7
135	7
136	0
137/138	4
139/140	0

VOLUME 6

Cover	0
Title	11
PN	0

Chapter 62 — MM

i – iv	6
1 – 4	6
5 – 6	0
7 – 8	4
9 – 12	6
13	0
14	6
14A – 14X	6
15 – 18	4
19 – 20	6
20A – 20H	6
20I/20J	6
21	6
22	4
23/24	4
25	4
26	6
27 – 34	4
34A/34B	6
35	6
36	4
37 – 39	6
40 – 46	4
47/48	4

Chapter 62 — IPB

1	6
2 – 3	7
4	6
4A/4B	7
5 – 6	7
6A/6B	7
7 – 8	7
9/10	7
11	7
12	6
13/14	6
15 – 16	6
17/18	7
19 – 22	7

Chapter 63 — MM

i	11
ii – iv	4
v	11
vi	6
1 – 3	0
4	10
5 – 6	0
7	10
8 – 10	0
11	10
12	0
13/14	0
15 – 18	11
18A – 18D	11
18E/18F	11
19	11
20	0
21 – 27	6
28 – 30	0
31	6
32 – 34	0
35 – 36	6
36A – 36J	6
37	0
38 – 42	4
43/44	0
45 – 46	4
47	0
48 – 50	4
51	0
52	4
53	6
54 – 57	4
58	6
59 – 69	4
70	0
71	4
72 – 73	0
74	4
75	6
76	4
77	0
78 – 83	4
84	0
85	4
86	0
87 – 88	4
89	0
90 – 98	4
99	0
100 – 102	4
103 – 104	0
105	4
106 – 107	10
108	4
109/110	0

Chapter 63 — IPB

1	6
2	11
2A/2B	11
3 – 5	11
6	6
6A/6B	7
7	7
8	0
9	4
10	0
11/12	0
13	0
14	4
15/16	4
17 – 18	4
19 – 20	7
20A – 20B	7
21	7
22	0
23	4

LOG OF PAGES (CONT)

Page No.	Rev No.
24 – 26	7
26A/26B	7
27	7
28	0
29	6
30	0
31 – 32	6
33/34	6
35	6
36 – 37	0
38 – 41	6
42	7
42A/42B	7
43	7
44	0
45/46	0
VOLUME 7	
Cover	12
Title	14
PN	13
Chapter 64 — MM	
i – ii	12
1/2	12
3 – 25	12
26 – 28	14
29	12
30	14
Chapter 64 — IPB	
1 – 8	13
Chapter 65 — MM	
i – ii	10
1	0
2	6
3 – 5	10
6	0
7/8	10
9	6
10 – 12	10
12A/12B	10
13 – 14	10
14A – 14B	10
15 – 20	10
20A – 20B	6
21 – 22	10
23	0
24	10
25 – 26	0
Chapter 65 — IPB	
1 – 2	6
3 – 5	7
6	6
7 – 8	7
9/10	7
VOLUME 8	
Cover	0
Title	10
PN	0
Chapter 67 — MM	
i – ii	0
iii/iv	0
1/2	4
3	4
4 – 8	0
9	6
10 – 11	10
12 – 32	0
33	4
34 – 35	0
36	4
37 – 58	0
59	6
60 – 63	0
64	6
65	0
66 – 67	6
68 – 70	0
71/72	0
Chapter 67 — IPB	
1	6
2	0
3/4	4
5	4
6 – 7	0
8 – 12	7
13/14	7
15	7
16 – 18	0
19/20	0
21	0
22	4
23 – 24	0
24A/24B	7
25	7
26	0
26A/26B	7
27	7
28	0
29 – 32	7
32A/32B	7
33 – 34	7
34A/34B	7
35	7
36	0
37/38	7
39	7
40	4
41 – 43	7
44	4
45 – 48	0
49/50	0
VOLUME 9	
Cover	0
Title	7
PN	0
Chapter 71 — MM	
i	0
ii	4
iii/iv	0
1 – 3	0
4	4
5 – 6	0
7 – 12	4
13 – 15	0
16 – 17	4
18	0
19	4
20	6
21/22	6
23	4
24 – 25	0
26 – 28	4
29 – 30	0
31 – 33	4
34	0
35	4
36	0

Export Classification C, ECCN EAR99

LOG OF PAGES (CONT)

Page No.	Rev No.
37 – 39	4
40 – 41	0
42 – 43	4
44	0
45	4
46	0
Chapter 71 — IPB	
1	7
2 – 4	6
5 – 8	7
8A/8B	7
9	7
10 – 12	4
12A/12B	7
13	7
14 – 20	4
20A/20B	7
21	7
22	6
22A/22B	6
23	7
24 – 25	6
26	7
26A/26B	6
27 – 28	7
29/30	7
31	7
32	4
33 – 37	7
38	4
39/40	4
41 – 42	4
42A/42B	7
43	7
44	6
45/46	6
47	7
48 – 50	4
50A/50B	7
51 – 66	7
Chapter 76 — MM	
i	4
ii	6
1/2	0
3	0
4 – 23	4
24	6
25 – 26	4
Chapter 76 — IPB	
1 – 2	6
2A/2B	7
3 – 4	7
4A/4B	7
5	7
6	6
7/8	7
9	7
10 – 12	4
Chapter 79 — MM	
i – ii	0
1	0
2	4
3	0
4	4
5	0
6	4
7/8	0
9	6
10	4
11	0
12	4
13	0
14 – 15	4
16	0
Chapter 79 — IPB	
1	6
2 – 12	7
13/14	7
15 – 16	7
VOLUME 10	
Cover	16
Title	16
PN	16
Chapter 95 — MM	
i	6
ii – iii	0
iv	4
v/vi	6
1 – 2	4
3/4	6
5/6	4
7 – 14	4
15 – 25	0
26	6
26A/26B	10
27	6
28	0
29 – 30	4
31/32	0
33 – 34	0
35	4
36 – 41	0
42 – 43	4
44	6
45	0
46	6
47	0
48	4
49 – 59	0
60 – 68	4
69/70	4
71 – 74	4
Chapter 95 — IPB	
1 – 4	6
4A/4B	6
5	6
6	4
7 – 13	7
14	6
15/16	7
17	7
18	6
18A/18B	7
19	7
20 – 23	6
24 – 25	4
26	6
26A/26B	7
27	7
28 – 29	6
30 – 33	4
34 – 36	7
Chapter 96 — MM	
i – iii	0
iv	16
v – vi	0
1	0
2 – 3	4

LOG OF PAGES (CONT)

Page No.	Rev No.
4 – 6	0
7 – 8	4
9 – 15	0
16	4
17/18	0
19/20	0
21 – 37	0
38 – 39	4
40	0
41/42	0
43	4
44	0
45/46	0
47 – 48	0
49/50	4
51 – 52	0
53/54	0
55 – 68	0
69/70	0
71	0
72 – 75	4
76 – 90	0
91/92	0
93 – 104	0
105/106	0
107 – 109	0
110	16
111 – 118	0
119/120	0
121 – 122	0
123	16
124 – 132	0
Chapter 96 — IPB	
1	6
2 – 4	7
4A – 4B	7
5	7
6	4
7 – 9	7
10	4
11 – 13	7
14	4
15/16	7
17	7
18	4
18A/18B	7
19 – 20	7
20A/20B	7
21 – 22	7
22A/22B	7
23 – 30	7
30A – 30B	7
30C/30D	7
31 – 36	7
36A – 36B	7
37	7
38	4
39 – 41	7
42	4
43 – 44	7
44A/44B	7
45	7
46	4
47 – 48	7
48A/48B	7
49	7
50 – 51	6
52 – 56	7
57	4
58 – 60	7
60A/60B	7
61	7
62	4
62A/62B	7
63	7
64	4
64A/64B	7
65	7
66	4
67 – 68	7
68A/68B	7
69 – 70	7
71/72	7
73	7
74	4
75	7
76	4
77 – 79	7
80	4
81/82	7
83	7
84	4
85/86	4
VOLUME 11	
Cover	16
Title	16
PN	16
Chapter 97 — MM	
i	16
ii – iii	4
iv	6
1	0
2	4
3 – 4	0
5/6	4
7	4
8 – 14	0
15	4
16 – 17	0
18	16
19 – 27	0
28	4
29 – 40	0
41	4
42	0
43	4
44	6
45 – 57	4
58 – 59	0
60	6
61 – 72	4
73/74	4
75 – 76	4
77/78	4
79/80	4
81 – 82	4
83	6
84 – 98	4
99/100	4
101 – 112	4
113/114	4
Chapter 97 — IPB	
1 – 2	6
3 – 4	7
4A/4B	7
5	7
6 – 7	6
8	7
8A – 8B	7
8C/8D	7
9 – 12	7
12A/12B	7
13	7

Export Classification C, ECCN EAR99

LOG OF PAGES (CONT)

Page No.	Rev No.
14	6
15 – 16	7
16A/16B	7
17	7
18	6
19/20	6
21	6
22	0
23/24	7
VOLUME 12	
Cover	0
Title	6
PN	0
Chapter 98 — MM	
i – ii	4
1	4
2 – 3	0
4	6
5	0
6 – 8	4
9/10	4
11 – 54	4
55	6
56	4
57/58	4
59/60	4
61/62	4
63 – 66	4
67	6
68	4
69/70	6
71/72	4
73	4
74	6
75 – 83	4
84	6
85 – 94	4
95	6
96 – 98	4
99	6
100 – 106	4
107/108	4
109 – 112	4
113/114	4
115 – 116	4
117/118	4
119	6
120	4
121/122	4
123 – 126	4
127/128	4
129	6
130	4
131	6
132	4
133	6
134	4
135/136	4
137 – 138	4
139/140	4
141 – 142	4
143/144	4
145 – 148	4
149/150	4
151/152	4
153/154	4
155/156	4
157 – 158	4
159/160	4
161/162	4
163 – 173	4
174	6
175 – 191	4
192	6
193 – 199	4
200	0
201 – 240	4
VOLUME 13	
Cover	0
Title	7
PN	0
Chapter 99-1 — MM	
i/ii	4
1 – 2	4
3/4	4
5/6	4
Chapter 99-1000 — IPB	
1 – 2	0
3	7
4	4
5	7
6	4
7/8	7
Chapter 99-2 — MM	
i/ii	4
1 – 2	4
3/4	4
Chapter 99-2000 — IPB	
1 – 2	4
2A/2B	7
3	7
4	4
5 – 6	7
Chapter 99-3 — MM	
i/ii	4
1/2	0
Chapter 99-3000 — IPB	
1	4
2 – 8	7
9/10	7
Chapter 99-4 — MM	
i/ii	4
1/2	0
Chapter 99-4000 — IPB	
1	4
2 – 8	7
9/10	7
Chapter 99-5 — MM	
i – ii	0
iii/iv	4
1	4
2	0
3	4
4 – 8	6
9 – 10	4
11/12	4
13	0
14 – 15	6
16 – 24	4
25	0
26	4
27/28	4
29 – 34	4
35/36	4
37/38	4

LOG OF PAGES (CONT)

Page No.	Rev No.
39/40	6
41 – 44	4
45	6
46	4
47	6
48	4
49/50	6
Chapter 99-5000 — IPB	
1	6
2	4
3/4	7
5	7
6	4
7/8	7
9	7
10	4
11/12	7
13	7
14	4
14A/14B	7
15	7
16	4
16A/16B	7
17 – 18	7
18A/18B	7
19	7
20	4
20A/20B	7
21	7
22	4
23/24	7
Chapter 99-6 — MM	
i – ii	4
1 – 6	4
7	0
8	4
9/10	4
11 – 12	4
13/14	4
Chapter 99-6000 — IPB	
1 – 2	4
3 – 5	7
6	4
7 – 9	7
10	4
11	7
12 – 13	4
14 – 15	7
16	4
17 – 18	7
18A/18B	7
19	7
20	4
21/22	7
Chapter 99-7 — MM	
i/ii	4
1 – 2	4
3/4	4
5/6	4
Chapter 99-7000 — IPB	
1 – 2	4
3	7
4	4
5/6	7
Chapter 99-8 — MM	
i/ii	4
1/2	4
Chapter 99-8000 — IPB	
1	4
2	7
3/4	7

HELP

H ELP

E VALUATE

L OGISTICS

P UBLICATIONS

Have you found something wrong with this manual — an error, an inconsistency, unclear instructions, etc.? Although we strive for accuracy and clarity, we may make errors on occasion. If we do and you discover it, we would appreciate your telling us about it so that we can change whatever is incorrect or unclear. Please be as specific as possible.

Your complaint or suggestion will be acknowledged and we will tell you what we intend to do.

You may use the enclosed Customer Feedback form, as applicable, to inform us where we have erred.

Your assistance is sincerely appreciated.

CUSTOMER FEEDBACK

Return by fax to Product Support Engineering (450) 433-0272, e-mail to publications@bellflight.com, or mail to the address on the next page.

Manual Title: _____

Manual Number (if assigned): _____

Date of Issue: _____

Date of Last Revision: _____

Section, Chapter, Paragraph Affected: _____

Your Feedback: _____

_____

_____

_____

Now Reads: _____

_____

_____

_____

Should Read: _____

_____

_____

_____

_____

Your Name: _____

Address: _____

_____

Position: _____ Telephone No.: _____

Company: _____ Fax No.: _____

Reference No. (your initials and date): _____

(If you choose to mail this form, fold in thirds with address exposed, tape and mail.)

TAPE HERE

From _____

_____

_____

POSTAGE
NECESSARY

Product Support Engineering
12,800 rue de l'Avenir
Mirabel, Québec, Canada, J7J 1R4

FOLD ON DOTTED LINES AND TAPE

TAPE HERE

IMPORTANT

HELICOPTER SALES NOTICE

Please complete this form and return by mail, e-mail (publications@bellflight.com), or fax (817-280-6466, Attention: CPDC). This will ensure that the new owners/operators receive updates to their ***Bell Textron Technical Manuals*** and ***Bulletins.***

Model of Helicopter Sold or Purchased _____

Serial and Registration Number _____

Name of ***New Owner*** (company or individual) _____

Name of ***New Operator*** _____

Future Publications to be mailed to this address:

Address _____

City _____

State/Province _____

Zip/Postal Code _____

Country _____

Fax No. _____ Telephone No. _____

E-mail Address _____

Register for access to electronic publications at www.mybell.com

TAPE HERE

From _____

_____

_____

NO POSTAGE
NECESSARY
IF MAILED
IN THE
UNITED STATES

BUSINESS REPLY MAIL

FIRST CLASS PERMIT NO. 1744 FORT WORTH, TEXAS

BELL

COMMERCIAL PUBLICATION DISTRIBUTION CENTER
P.O. BOX 482
FORT WORTH, TEXAS 76101-0482

FOLD ON DOTTED LINES AND TAPE

TAPE HERE

SPARE PARTS WARRANTY

WARRANTY: Seller warrants each new helicopter part or helicopter part reconditioned by Seller to be free from defect in material and workmanship under normal use and service and if installed on Bell model helicopters for up to 1000 hours of operation, one (1) year from date of installation, or two (2) years from date of shipment by Seller, whichever occurs first. Seller assigns each manufacturer's warranty to Buyer to the extent such manufacturer's warranty exists and is assignable.

Parts, components and assemblies of all helicopter parts may have been restored or reworked due to mars, blemishes, dents or other irregularities during the manufacturing process. Such restoration and/or rework are permitted under Seller's approved manufacturing and engineering processes and guidelines. The restoration and/or rework so completed do not render such items defective in material or workmanship.

Seller's sole obligation under this warranty is limited to the repair or replacement of parts which are determined to Seller's reasonable satisfaction to have been defective within the applicable warranty period as described above. Replacement of parts may be either new or reconditioned at Seller's election and at the lowest allowable maintenance level contained in Seller's manuals, service bulletins or applicable supplier manuals. Seller shall also reimburse reasonable freight charges, excluding insurance, customs fees, duties, handling fees, and taxes. Seller shall not reimburse Buyer for any parts repaired or replaced outside of the Seller's Warranty Claims Process unless express prior written authorization is granted by Seller's Warranty Department to Buyer for such repair or replacement.

NO FAULT FOUND: In the event Seller determines, after evaluation of a returned part, that a defect does not exist, then Buyer shall pay all expenses incurred by Seller related to the return including, but not limited to, costs incurred in shipping and evaluating the part and cost for any replacement part and restocking of the part. In addition, Seller shall not reimburse Buyer for any costs related to the removal or reinstallation of such a part.

WARRANTY CLAIM PROCESS: Defective parts must be reported in writing to the Seller's Warranty Administration within fourteen (14) days of being found defective. Parts may be repaired or replaced with new or reconditioned parts, at Seller's election. Warranty adjustment is contingent upon the Buyer complying with the Seller's Warranty Process as described in the Bell Helicopter VISTA Customer Portal and with the Seller's Warranty Administration disposition instructions for defective parts. Failure to properly comply with Seller's Warranty Process may, at Seller's sole option, void Seller's warranty as to the allegedly defective part.

RETURN SHIPMENT: Parts returned to Seller will be eligible for remedy under this warranty only if the part is carefully packed by the Buyer for the return shipment. Damage occurring to a part due to improper packaging may result in the denial of a warranty claim. In the event that Seller determines a returned part to be damaged or unsalvageable due to improper packaging, the Buyer will be billed repair or replacement cost incurred by Seller. The party initiating shipment bears the risk of loss or damage to parts in transit.

CORE RETURNS: Any core removed by Buyer for which Seller has furnished a replacement part through the Warranty Process shall be shipped by Buyer, with all historical service records, to a facility designated by Seller, within fourteen (14) days of receipt by Buyer of the replacement part. Buyer shall provide Seller with proof of shipment within fourteen (14) days following receipt of the replacement part. In the event that Buyer fails to provide Seller with such proof of shipment within the fourteen (14) days or fails to provide the applicable historical service records, Buyer shall be charged the invoiced value of the replacement part.

WARRANTY AND LIABILITY DISCLAIMERS AND EXCLUSIONS: THIS WARRANTY IS GIVEN AND ACCEPTED IN PLACE OF (i) ALL OTHER WARRANTIES OR CONDITIONS, EXPRESS OR IMPLIED, INCLUDING BUT NOT LIMITED TO THE IMPLIED WARRANTIES OR CONDITIONS OF MERCHANTABILITY OR FITNESS FOR A PARTICULAR PURPOSE AND (ii) ANY OBLIGATION, LIABILITY, RIGHT, CLAIM OR REMEDY IN CONTRACT OR IN TORT, INCLUDING PRODUCT LIABILITIES BASED UPON STRICT LIABILITY, NEGLIGENCE, OR IMPLIED WARRANTY IN LAW.

This warranty is the only warranty made by Seller. The Buyer's sole remedy for a breach of this warranty or any defect in a part is the repair or replacement of the helicopter part and reimbursement of reasonable freight charges. Seller excludes liability, whether as a result of a breach of contract or warranty, negligence or strict product liability, for incidental or consequential damages, including without limitation, damage to the helicopter or other property, costs and expenses resulting from required changes or modifications to helicopter components and assemblies, changes in retirement lives and overhaul periods, local customs fees and taxes, and costs or expenses for commercial losses or lost profits due to loss of use or grounding of helicopters or otherwise.

Seller makes no warranty and disclaims all liability in contract or in tort, including, without limitation, negligence and strict tort liability, with respect to work performed by third parties at Buyer's request and with respect to engines, engine accessories, batteries, radios, and avionics.

Seller makes no warranty and disclaims all liability with respect to components or parts damaged by, or worn due to, normal wear and tear, erosion or corrosion. Seller makes no warranty and disclaims all liability for consumables which are defined as items required for normal and routine maintenance or replaced at scheduled intervals shorter than the warranty period. "Consumables" include but are not limited to engine and hydraulic oil, oil filters, packings and o-rings, anti-corrosion and/or sealing compounds, brush plating material, nuts, bolts, washers, screws, fluids, compounds, and standard aircraft hardware that is readily available to aircraft operators from sources other than Seller.

This warranty shall not apply to any helicopter part which has been repaired or altered outside Seller's factory in any way so as, in Seller's sole judgment, to affect its stability, safety or reliability. This warranty shall not apply to any helicopter part which has been subject to misuse, negligence or accident, or which has been installed in any aircraft which has been destroyed. Repairs and alterations which use or incorporate parts and components other than genuine Bell parts or parts approved by Bell for direct acquisition from sources other than Bell itself are not warranted by Bell, and this warranty shall be void to the extent that such repairs and alterations,

in Seller's sole judgment, affect the stability, safety or reliability of the helicopter or any part thereof, or damage genuine Bell or Bell-approved parts. No person, corporation or organization, including Bell Authorized Customer Service Facilities, is authorized by Seller to assume for it any other liability in connection with the sale of its helicopters and parts.

NO STATEMENT, WHETHER WRITTEN OR ORAL, MADE BY ANY PERSON, CORPORATION OR ORGANIZATION, INCLUDING BELL AUTHORIZED CUSTOMER SERVICE FACILITIES, MAY BE TAKEN AS A WARRANTY NOR WILL IT BIND SELLER.

CHOICE OF LAW AND JURISDICTION: This warranty shall be interpreted under and governed by the laws of the State of Texas. All legal actions based upon claims or disputes pertaining to or involving this warranty including, but not limited to, Seller's denial of any claim or portion thereof under this warranty, must be filed in the courts of general jurisdiction of Tarrant County, Texas or in the United States District Court for the Northern District of Texas, Ft. Worth Division located in Ft. Worth, Tarrant County, Texas. In the event that Buyer files such an action in either of the court systems identified above, and a final judgment in Seller's favor is rendered by such court, then Buyer shall indemnify Seller for all costs, expenses and attorneys' fees incurred by Seller in defense of such claims. In the event Buyer files such a legal action in a court other than those specified, and Seller successfully obtains dismissal of that action or transfer thereof to the above described court systems, then Buyer shall indemnify Seller for all costs, expenses and attorneys' fees incurred by Seller in obtaining such dismissal or transfer.

BULLETIN RECORD

This Bulletin Record provides a current listing of applicable bulletins that have been incorporated in this manual. Subsequent applicable bulletins will be incorporated in future revisions/reissues.

ALERT SERVICE BULLETINS

ASB NUMBER	SUBJECT	DATE
230-02-26	Main Torot Hub Assemblies P/N 222-012-101-105 and -109. Inspection of	1 April 2002
230-03-28	Main Rotor Hub P/N 222-012-101-ALL, Inspection of	23 September 2003

TECHNICAL BULLETINS

TB NUMBER	SUBJECT	DATE
230-06-40	Tail Rotor Blades 222-016-001-139 and -141 and Tail Rotor Yoke Assembly 222-012-702-113, Introduction of	
230-08-41	Main Rotor Mast Assembly (Torquemeter) Seven Calendar Year Inspection, Increase of	

TEMPORARY REVISION RECORD

This Temporary Revision Record provides a current listing of active Temporary Revisions against the manual. Temporary Revisions, which have been canceled/incorporated, will only be maintained on the record until the next revision is issued. If there are no Temporary Revisions shown on the record, this is confirmation that there are no Temporary Revisions issued against the manual.

TEMP. REV. NO.	TITLE	DATE ISSUED	DATE CANCELED

NOTE: For tracking purposes, Temporary Revisions are now being numbered (Example: TR-1).

LIST OF CHAPTERS

Title	Chapter
Introduction	1
Airworthiness Limitations	4
Inspections and Component Overhaul Schedule	5
Dimensions and Charts	6
Lifting and Jacking	7
Weight and Balance	8
Towing	9
Parking and Mooring	10
Placards and Markings	11
Servicing	12
Air Distribution (Ventilation)	21
Equipment and Furnishings	25
Fire Protection	26
Fuel System	28
Hydraulics	29
Ice and Rain Protection	30
Landing Gear	32
Doors and Windows	52
Fuselage	53
Main Rotor	62
Main Rotor Drive System	63
Tail Rotor	64
Tail Rotor Drive System	65
Flight Control System	67
Power Plant	71
Engine Controls	76
Engine Oil System	79
Instruments	95
Electrical System	96
Avionics	97
Wiring Diagrams	98
Kits	99

CHAPTER 4 — AIRWORTHINESS LIMITATIONS SCHEDULE

CONTENTS — MAINTENANCE PROCEDURES

Paragraph Number	Title	Chapter/Section Number	Page Number
	AIRWORTHINESS LIMITATIONS SCHEDULE		
4-1	Airworthiness limitations schedule	4-00-00	1

The Airworthiness Limitations Schedule is approved by the Minister and specifies maintenance required by any applicable airworthiness or operational rule unless an alternative program has been approved by the Minister.

Chief, Airworthiness Engineering
Transport Canada, Aviation

NOMENCLATURE	DESCRIPTION	USE AND APPLICATION
Basic Manual	12 March 1992	
Revision 1	21 August 1992	
Revision 2	20 January 1993	
Revision 3	2 February 1993	
Revision 4	15 July 1993	Airworthiness Limitations Not Affected
Revision 5	22 December 1993	
Revision 6	4 August 1995	Airworthiness Limitations Not Affected
Revision 7	31 March 1998	Airworthiness Limitations Not Affected

AIRWORTHINESS LIMITATIONS SCHEDULE

4-2. AIRWORTHINESS LIMITATIONS SCHEDULE.

The mandatory Airworthiness schedule summarizes, in tabular form, the mandatory maximum hours life of various components before retiring from service. Parts not listed on the schedule have unlimited Airworthiness life.

Refer to engine manufacturers publications for power plant components airworthiness limitations.

NOTE

The operating time specified for retirement for any given part number contained in this schedule applies to all successive dash numbers for that component unless otherwise specified.

Airworthiness lives assigned to helicopter components and assemblies are based upon experience, testing and engineering judgement, and cannot be changed without approval by the Minister of Transport Canada.

NOTE

Prior to disposing of unsalvageable aircraft parts and materials, caution should be exercised to ensure that the parts and materials are disposed of in a manner that does not allow them to be returned to service. See FAA Advisory Circular 21-38 for guidance on the disposal of unsalvageable aircraft parts and materials.

NOTE

Neither the assignment of a retirement life to a component nor failure to assign a retirement life constitutes a warranty of any kind. The only warranty applicable to the helicopter and any component is that warranty included in the Purchase Agreement for the helicopter or the component.

AIRWORTHINESS LIMITATIONS SCHEDULE

COMPONENT	PART NUMBER	AIRWORTHINESS LIFE (HOURS)
Main Rotor		
Main Rotor Blade	222-015-600-107 and 111	6000
Main Rotor Grip	222-012-104-101	5000
Main Rotor Yoke	222-011-102-105	5000
Main Rotor Trunnion	222-010-154-111	5000
Outboard Spindle	222-011-108-105	5000
Flapping Bearing	222-310-114-111	5000
Inboard Bearing Assembly	222-310-125-101	5000
Inboard Spindle Bolt	222-310-128-101	2500
Outboard Spindle Bolt	222-310-129-101	2500
Pitch Horn Assembly	222-012-102-101	5000
Support, Pendulum Damper	222-011-114-103	5000
Main Rotor Pitch Link Assembly	222-010-429-105	5000
Swashplate Drive Assembly		
Walking Beam Assembly	222-010-415-113	5000
Drive Hub Assembly	222-010-471-101	5000

AIRWORTHINESS LIMITATIONS SCHEDULE (Cont)

COMPONENT	PART NUMBER	AIRWORTHINESS LIFE (HOURS)
Trunnion Assembly	222-011-417-105	5000
Drive Link Assemblies	222-011-416-109 and -111	5000
Swashplate Outer Ring Assembly	222-010-403-113	5000
Swashplate Inner Ring Assembly	222-010-404-115	5000
Cyclic Links Assemblies	222-010-419-101 and -106	5000
Swashplate Support	222-010-418-103	5000
Swashplate Ball Assembly	222-010-405-115	5000
Collective Lever Assembly	222-010-497-109	5000
Idler Link Assembly	222-010-409-105	5000
Collective Beam	222-011-402-101	5000
Cyclic Lever Assembly	222-010-408-113	5000
Actuator Support Assembly	222-040-125-001	5000
Tail Rotor and Controls		
Tail Rotor Blade Assembly	222-016-001-111	5000
Tail Rotor Yoke Assembly	222-012-702-109	5000
Transmission and Drive System		
Mast Assembly, Torquemeter	222-040-002-113	5000
Tail Rotor Output Shaft	222-042-402-005	5000
Transmission Top Case	222-040-061-105	5000
Collector Gear (Transmission)	222-040-109-105	5000
Fire Protection System		
Cartridge Fire Extinguishing (HTL)	13083-5	1
Roof Frahm Damper		
Support Assembly	230-030-101-105	5000

1 6 years since manufacture date or 4 years of service whichever occurs first.

CHAPTER 5 — INSPECTIONS AND COMPONENT OVERHAUL SCHEDULE

TABLE OF CONTENTS

Paragraph Number	Title	Chapter/Section Number	Page Number
	INSPECTIONS		
5-1	General	5-00-00	3
5-2	Items Not Covered in the Inspection	5-00-00	3
5-3	Crash Damage	5-00-00	4
5-4	Types of Inspections	5-00-00	4
5-5	Definitions	5-00-00	5
5-6	Inspection and Overhaul Tolerance	5-00-00	7
	SCHEDULED INSPECTIONS		
5-7	Scheduled Inspections	5-00-00	9
5-8	Scheduled Airframe Inspections	5-00-00	9
5-9	Airframe Periodic	5-00-00	9
5-10	Airframe Progressive	5-00-00	9
5-11	Inspection Program Selection	5-00-00	9
5-12	Scheduled Component Inspection	5-00-00	9
5-13	50-Hour Inspection	5-00-00	11
5-14	150-Hour Inspection	5-00-00	15
5-15	600-Hour Inspection	5-00-00	25
5-16	Progressive Inspection — Event 1	5-00-00	29
5-17	Progressive Inspection — Event 2	5-00-00	33
5-18	Progressive Inspection — Event 3	5-00-00	37
5-19	Progressive Inspection — Event 4	5-00-00	41
5-20	Progressive Inspection — Event 5	5-00-00	47
5-21	Progressive Inspection — Event 6	5-00-00	51
5-22	Progressive Inspection — Event 7	5-00-00	55
5-23	Progressive Inspection — Event 8	5-00-00	61
5-24	Progressive Inspection — Event 9	5-00-00	65
5-25	Progressive Inspection — Event 10	5-00-00	69
5-26	Progressive Inspection — Event 11	5-00-00	73
5-27	Progressive Inspection — Event 12	5-00-00	77
5-28	Every 150 Hours of Component Operation	5-00-00	81
5-29	Every 300 Hours of Component Operation	5-00-00	85
5-30	Every 600 Hours or 6 Months of Component Operation	5-00-00	89
5-31	Every 600 Hours or 12 Months of Component Operation	5-00-00	91
5-32	Every 600 Hours of Component Operation	5-00-00	93
5-33	Every 1200 Hours of Component Operation	5-00-00	95
5-34	Every 2500 Hours of Component Operation	5-00-00	97
5-35	At 2500 Hours and Every 1200 Hours Thereafter	5-00-00	99
5-36	Every 6 Months	5-00-00	101
5-37	Every 2 Calendar Years	5-00-00	103
5-38	Every 3 Calendar Years	5-00-00	107
5-39	Every 5 Calendar Years	5-00-00	109
5-40	Every 10 Calendar Years	5-00-00	111

TABLE OF CONTENTS (CONT)

Paragraph Number	Title	Chapter/Section Number	Page Number
	SPECIAL INSPECTIONS		
5-41	Special Inspections	5-00-00	113
5-42	After Every Main Rotor Hub Disassembly	5-00-00	115
5-43	After First Flight Following Each Installation	5-00-00	117
5-44	After 1 to 5 Hours of Operation Following Each Installation	5-00-00	119
5-45	After 5 to 10 Hours of Operation Following Each Installation	5-00-00	121
5-46	After 25 Hours of Operation Following Each Installation	5-00-00	123
5-47	After 100 Hours of Operation Following Each Installation	5-00-00	125
	CONDITIONAL INSPECTIONS		
5-48	Conditional Inspections	5-00-00	127
5-49	Hard Landing	5-00-00	129
5-50	Sudden Stoppage — Power ON or OFF	5-00-00	137
5-51	Overtorque	5-00-00	145
5-52	Overtorque — One Engine Inoperative (OEI)	5-00-00	151
5-53	Lightning Strike	5-00-00	153
5-54	Overspeed	5-00-00	157
5-55	Compressor Stall or Surge	5-00-00	161
	COMPONENT OVERHAUL SCHEDULE		
5-56	Component Overhaul Schedule	5-00-00	167

FIGURES

Figure Number	Title	Page Number
5-1	Maintenance Zones	6

TABLES

Table Number	Title	Page Number
5-1	Progressive Inspection Events	9
5-2	Component Overhaul Schedule	167

INSPECTIONS

5-1. GENERAL

This chapter contains the time limit intervals and the requirements for the Scheduled Inspection, Special Inspection, Conditional Inspection, and for the Component Overhaul Schedule.

WARNING

FAILURE TO CORRECT CONDITIONS SUCH AS, BUT NOT LIMITED TO, CORROSION, EROSION, MECHANICAL DAMAGE, OR OBVIOUS WEAR FOUND DURING A SCHEDULED INSPECTION COULD SERIOUSLY AFFECT THE AIRWORTHINESS OF THE HELICOPTER.

The inspection intervals given in this chapter are the maximum permitted. Do not exceed these intervals. The owner/operator is responsible for increasing the scope and the frequency of the inspections as necessary. Make sure the helicopter is maintained safely during all unusual local changes, such as environmental conditions, helicopter use, etc. You can request changes to the requirements in this chapter through the local aviation authority.

The inspection intervals and the Component Overhaul Schedule given in this chapter are applicable only to Bell Helicopter Textron approved parts.

NOTE

The time period given for the overhaul of a component (or the failure to give a time period for the overhaul of a component) does not constitute a warranty of any kind. The only warranty applicable to the helicopter or any component is the warranty included in the Purchase Agreement for the helicopter or the component.

The Time Between Overhaul (TBO) and the inspection periods are determined through experience, tests, Lead-The-Fleet (LTF), or any other special programs and the judgement of Bell Helicopter Textron engineers. They are subject to change only by Bell Helicopter Textron or an approved airworthiness authority.

Changes to TBO will be introduced by either revision to the Maintenance Manual Chapter 5 or a Technical Bulletin.

Every calendar and hourly inspection is a thorough visual inspection to determine the airworthiness of the helicopter and the components. Qualified persons must do the inspections in accordance with quality standard aircraft practices and the applicable maintenance manuals. Bell Helicopter Textron considers that it is mandatory to obey all the applicable Alert Service Bulletins (ASB) and the Airworthiness Directives (AD).

Component operating time records are necessary for components that have scheduled maintenance procedures which are different from those of the airframe. It is the owner/operator's responsibility to keep the Historical Service Records for the applicable component and to do the necessary maintenance procedures.

Before each inspection, remove or open the necessary cowlings, fairing, inspection doors, and panels.

5-2. ITEMS NOT COVERED IN THE INSPECTION

This manual does not include the specific inspection intervals for some components such as the compass calibration and the pitot static test. These specific inspection intervals are given by your government regulatory authority. Refer to their requirements for these specific inspections.

The owner/operator of the helicopter is responsible for the maintenance done on the helicopter. It is the owner/operator's responsibility to:

1. Establish and maintain the log books, and review them for discrepancies.

2. Make sure the Alert Service Bulletins (ASB), the Airworthiness Directives (AD), and the special inspections are done when they are required to be done.

3. Make sure the scheduled inspections, the special inspections, and the required tests for all of the installed kits are complied with.

4. Make sure all parts and components for which Historical Service Records are required have documented traceability to their original installation in the helicopter.

5. Make sure all limited life parts that have completed their published operating limits are replaced.

6. Make sure all of the components that have completed their published overhaul periods are overhauled.

7. Make sure all of the maintenance that is done on the helicopter is done by an approved maintenance organization.

The maintenance organization/person doing the maintenance is responsible for the quality of the maintenance done.

The owner/operator may choose to ask the maintenance organization/person doing the maintenance to perform the tasks listed by prior arrangement through a separate formal agreement.

5-3. CRASH DAMAGE

Because of the many possible combinations that can result from crash damage, it is not possible to include the specific repair tasks in this category. The helicopter mechanic must make an analysis of the crash damage for each situation. Do the repair in accordance with the degree of damage to the specific part and the applicable repair procedures in this manual. Call Bell Helicopter Textron Product Support Engineering with your analysis of the crash damage.

5-4. TYPES OF INSPECTIONS

1. The maintenance procedures may include scheduled inspections, special inspections, conditional inspections, component interim inspections, and component overhaul inspections.

a. Scheduled inspections must occur at specified operating intervals. The intervals may be in operating time (hours), cycles, torque events (RIN), calendar (days, months, years) or other assigned units. This makes sure that the helicopter is airworthy.

b. Special inspections are of a temporary nature or of a special interval that is not consistent with the scheduled inspections.

c. Conditional inspections do not occur at a specified time. A conditional inspection is the result of known or suspected unusual event, known or suspected malfunctions, or defects.

d. An interim inspection occurs between overhauls.

e. The component overhaul schedule gives the elapsed operating time at which a component must be removed, disassembled, examined for condition, and overhauled, in accordance with data approved by Bell Helicopter Textron.

2. Lubrication and servicing requirements are in addition to those stated in this chapter (Chapter 12).

3. For corrosion control refer to the Corrosion Control Guide, CSSD-PSE-87-001 and the BHT-ALL-SPM.

4. For the 250-C30 series engine, refer to the Rolls-Royce Operations and Maintenance Manual (14W2) for the scheduled inspection, special inspection, conditional inspection, and component overhaul schedule.

5. For the common Bell Helicopter Textron approved optional equipment that is integrated into this maintenance manual, refer to this chapter for the scheduled inspection, conditional inspection, component interim inspection, and component overhaul inspection.

6. For all other Bell Helicopter Textron approved equipment, refer to the applicable Supplement in Chapter 99 of this manual for the scheduled inspection, special inspection, conditional inspection, component interim inspection, and component overhaul inspection.

7. For the inspection requirements for optional equipment approved under Supplement Type Approval/Certificate (STA/STC), refer to the applicable STA/STC documentation. Maintenance and inspection

of these items are the responsibility of the owner/ operator.

5-5. DEFINITIONS

- Examine — Look carefully to find the condition of the component. Find how that condition relates to a specific standard.

- Condition — The state of an item compared to a known standard.

- Security — The presence of attaching parts that are properly tightened or appear to be, and the presence of properly installed (as required) locking devices such as lockwire, cotter pins, or other.

- Standard — A specified rule or measure that you use to find the condition of a component.

- Damage — Physical deterioration of a component.

- Discard — Reject a component that has damage that cannot be repaired. To permanently remove from service.

- Inspection — A procedure that includes checking, inspecting, and examining a system or a component.

- Non scheduled inspection — An inspection that has not been scheduled.

- Periodic inspection — An inspection which is repeated at equal time intervals.

- Progressive inspection — A scheduled inspection that is divided into smaller segments. This makes the best use of the time and the resources available.

- Maintenance — The servicing and/or the repair of a helicopter, a system, or a component that keeps it serviceable.

- Preventive maintenance — To do small maintenance action(s) on a regular basis to prevent non scheduled maintenance.

- Operating time — Actual flight or calendar time that must be recorded in the Historical Service Records or in the helicopter logs. The operating time is specified as:

  - Time in service (flight time) — The measured time which starts the moment the helicopter leaves the ground and continues until it touches the ground at the next point of landing. The time when the helicopter is on the ground, with the engine and the rotor turning, is not included.

  - Calendar time — The elapsed time starts on the day the inspection is completed, the component is installed, or the rotor is turned for the first time and ends on the last day of the month that the time limit expires. Calendar time is continuous. Calendar time does not stop when you remove a component, put the helicopter in storage, etc.

- Maintenance zone — A specified area of the helicopter, which may contain more than one system or more than one group of related components. Maintenance zones (Figure 5-1) are used when you do a progressive inspection.

- Lead-the-Fleet (LTF) Program — This is a program to validate the performance of an approved product improvement or a change to a maintenance interval. The engineering aspects of this change are approved. The program is closely monitored by Bell Helicopter Textron in an operational environment with selected operators.

- Special Programs — These are approved programs that may be initiated under certain special conditions to meet specific requirements. These programs will be clearly defined through a plan and the engineering and maintenance aspects will be approved by the regulatory authorities.

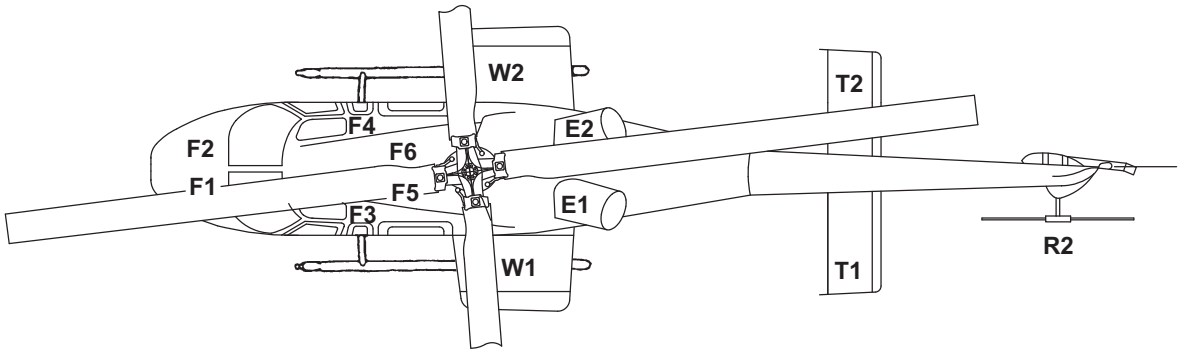

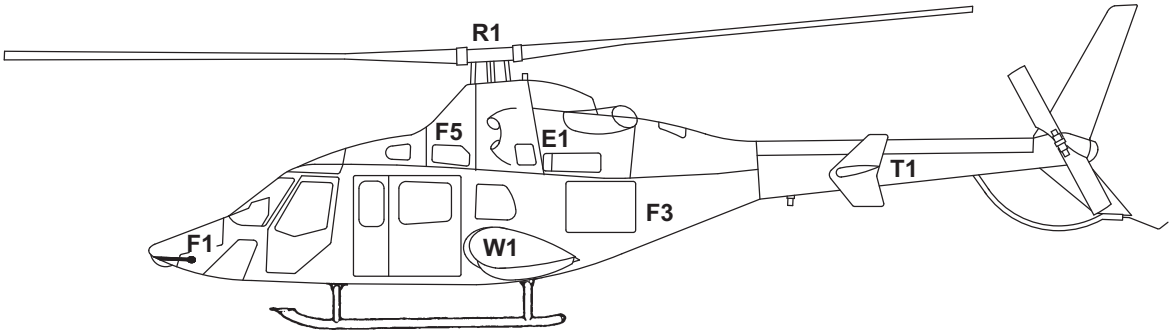

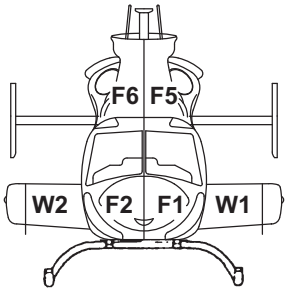

E1	Left engine
E2	Right engine
F1	Left forward fuselage
F2	Right forward fuselage
F3	Left aft fuselage
F4	Right aft fuselage
F5	Left pylon
F6	Right pylon
R1	Main rotor
R2	Tail rotor
T1	Left tailboom
T2	Right tailboom
W1	Left wing
W2	Right wing

230_MM_05_0001

Figure 5-1. Maintenance Zones

5-6. INSPECTION AND OVERHAUL TOLERANCE

WARNING

DO NOT APPLY THESE TOLERANCES TO PARTS WITH A LIMITED AIRWORTHINESS LIFE (CHAPTER 4).

The Bell Helicopter Textron approved tolerance for scheduled inspections, special inspections, interim inspections, and overhaul intervals, unless otherwise stated, is 10% or up to a maximum of 100 hours operating time/30 days calendar time, whichever is less. The tolerances are established for maintenance scheduling convenience only.

Scheduled inspections, special inspections, interim inspections, or overhaul intervals required beyond the stated tolerances must be approved by Product Support Engineering.

NOTE

The following is only applicable for those operators whose governing aviation authority requires to specifically approve the inspection and overhaul tolerance.

If approval of the inspection and overhaul tolerance is required by the applicable governing aviation authority, this is the responsibility of the owner/operator.

Refer to the Rolls-Royce 250-C30 Series Operation and Maintenance Manual (14W2) for inspection and overhaul tolerances.

SCHEDULED INSPECTIONS

5-7. SCHEDULED INSPECTIONS

Scheduled inspections include airframe and component inspections. The scheduled airframe inspection intervals are based on the airframe operating time. The scheduled component inspection intervals are based on the component operating time.

5-8. SCHEDULED AIRFRAME INSPECTIONS

Bell Helicopter Textron developed two scheduled airframe inspection programs to give flexibility for maximum helicopter use. An operator can choose one of the Bell programs or design their own program. The selection of an alternative inspection program and its approval by the governing civil aviation authority is the responsibility of the owner/operator.

5-9. Airframe Periodic

Do the inspections at intervals of 50 hours, 150 hours and 600 hours. A minimum of one complete 50-hour, 150-hour, and 600-hour inspection must be accomplished within 12 months.

5-10. Airframe Progressive

The requirements of the airframe periodic 50-hour, 150-hour, and 600-hour inspections are combined in 12 separate events of similar workload, and are done at 50-hour intervals. The events must be accomplished in the sequence shown in Table 5-1. After Event 12 is completed, the progressive cycle begins again with Event 1. A minimum of one complete cycle (12 events) must be accomplished within 12 months.

5-11. Inspection Program Selection

You must establish the airframe periodic or the airframe progressive program to maintain the helicopter from new. To change between the periodic and progressive programs, you must first do the 50-hour, 150-hour, and 600-hour inspections. The owner/operator is responsible to not exceed the time interval of any scheduled airframe inspection procedure.

Table 5-1. Progressive Inspection Events

AIRFRAME HOURS	EVENT NUMBER
50	1
100	2
150	3
200	4
250	5
300	6
350	7
400	8
450	9
500	10
550	11
600	12

5-12. SCHEDULED COMPONENT INSPECTION

Scheduled component inspections have been established for those items to be inspected at intervals other than those established for helicopter periodic inspections. Do the scheduled component inspections at the intervals that follow:

- Every 150 hours
- Every 300 hours
- Every 600 hours or 6 months
- Every 600 hours or 12 months
- Every 600 hours
- Every 1200 hours
- Every 2500 hours
- At 2500 hours and every 1200 hours thereafter
- Every 6 months

- Every 2 years
- Every 3 years
- Every 5 years
- Every 10 years

SCHEDULED INSPECTIONS

5-13. 50-HOUR INSPECTION

DATA REFERENCE	INSPECTION TASK DESCRIPTION	INITIAL MECH	INITIAL OTHER
	DATE: _____ **W.O.** _____ **FACILITY:** _____ **HELICOPTER S/N:** _____ **REGISTRY NO.:** _____ **TOTAL TIME:** _____ **SIGNATURE:** _____		
	To be performed every 50 hours of operating time or a minimum of once every 12 months, whichever comes first.		
	GENERAL		
	1. Log book — Review for recorded discrepancies. Correct discrepancies on installed equipment.		
	2. Make sure all applicable and required special instructions, Alert Service Bulletins (ASB), and Airworthiness Directives (AD) are accomplished.		
Chapter 99	**3.** Comply with Scheduled Inspections, Special Inspections, and required tests for all installed kits (refer to appropriate kit).		
Chapter 4	**4.** Replace all limited life components that have completed published operating limits.		
Paragraph 5-56	**5.** Overhaul all components that have completed published overhaul periods.		
	6. Check all exposed electrical wiring for worn or frayed cables, loose or broken clamps, and fasteners.		
Rolls-Royce 250-C30 Series Operation and Maintenance Manual, 14W2	**7.** Perform applicable engine inspection.		

SCHEDULED INSPECTIONS

5-13. 50-HOUR INSPECTION (CONT)

DATA REFERENCE	INSPECTION TASK DESCRIPTION	INITIAL MECH	INITIAL OTHER
Chapter 12	**8.** Lubricate helicopter components.		
	DETAIL		
Chapter 28 Chapter 53	**1.** Inspect airframe exterior surfaces for cracks and damage. Inspect underside of fuselage and wing for evidence of fuel leaks.		
Chapter 32	**2.** Inspect landing gear crosstubes, skid tubes, and skid shoes for condition and security of attachment.		
Chapter 32	**3.** If installed, inspect nose landing gear doors for visible damage or deformation. Inspect tubes and linkages for security of attachment to door fitting and inspect for cracks in skin at door hinges.		
Chapter 32 BHT-230-CR&O-V.1	**4.** If installed, inspect nose landing gear for condition, extend-retract and downlock actuators for leakage, and tire for proper inflation and serviceability. Inspect wheel for cracks and serviceability.		
Chapter 32 BHT-230-CR&O-V.1	**5.** If installed, inspect main landing gear for condition, brake assemblies for hydraulic leaks and excessive lining wear, brake disc and drive keys for condition, and tire for proper inflation and serviceability. Inspect wheel for cracks and serviceability. W1/W2		
BHT-230-CR&O-V.2	**6.** Inspect battery for cracks and signs of electrolyte leakage and corrosion. F1/F2		
Chapter 29 BHT-230-CR&O-4	**7.** Inspect cyclic and collective control actuators for evidence of bearing wear and security of attachment at transmission mount. Inspect piston rods for scoring, pitting, or wear, and excessive hydraulic leakage. R1		
Chapter 62	**8.** Inspect main rotor pitch link universal bearings for axial and radial wear and wear between inner races and housing. R1		

SCHEDULED INSPECTIONS

5-13. 50-HOUR INSPECTION (CONT)

DATA REFERENCE	INSPECTION TASK DESCRIPTION	INITIAL MECH	INITIAL OTHER
	NOTE Retorque is not required if flapping springs 222-310-117-105 are installed.		
BHT-230-CR&O-2	**9.** Verify torque of main rotor trunnion bolts in the tightening direction, minimum 45 foot-pounds (61 Nm). Provided 45 foot-pounds (61 Nm) is reached without movement of bolts, torque bolts to 53 foot-pounds (72 Nm). If any bolt moves before 45 foot-pounds (61 Nm) is reached, remove all six bolts and visually inspect for cracks or signs of yielding. If any defective bolts are found, replace all six bolts. If no defect(s) are found, reinstall bolts. R1		
Chapter 62 BHT-230-CR&O-2	**10.** For all main rotor hub assemblies, verify torque of main rotor flapping bearing(s) retaining bolt/nuts. Apply 100 foot-pounds (135 Nm) of torque to the nut, in the tightening direction. Provided 100 foot-pounds (135 Nm) of torque is reached without movement of the nut, torque the bolt/nut to 125 foot-pounds (169 Nm). If any nut moves before 100 foot-pounds (135 Nm) of torque is reached, remove flapping bearing from main rotor hub assembly. Inspect/repair flapping bearing and main rotor yoke assemblies. R1		
Chapter 79	**11.** Inspect external engine oil filters for impending bypass. E1/E2		
Chapter 29	**12.** Inspect tail rotor control actuator for evidence of bearing wear, security of attachment, and evidence of leakage. F3/F4		
BHT-230-CR&O-3	**13.** Inspect tail rotor pitch links for worn bearings and freedom of operation. R2		
	NOTE Clean more frequently if operating in a corrosive environment or if deemed necessary due to extreme environmental conditions.		
Chapter 62 Chapter 64	**14.** Clean main and tail rotor blades. R1/R2		

SCHEDULED INSPECTIONS

5-13. 50-HOUR INSPECTION (CONT)

DATA REFERENCE	INSPECTION TASK DESCRIPTION	INITIAL MECH	INITIAL OTHER
	CAUTION ON BLADES THAT HAVE EROSION PROTECTION TAPE INSTALLED, CARE MUST BE TAKEN TO PREVENT PRESERVATIVE OIL FROM CONTACTING THE TAPE. CORROSION PREVENTIVE COMPOUND (C-125) WILL DETERIORATE THE TAPE ADHESION. **NOTE** It is not necessary to apply preservative oil to the blade fiberglass skin. One inch of the fiberglass skin adjacent to the metal components may be coated with corrosion preventive compound (C-125) to ensure complete protection. **15.** When dry, apply corrosion preventive compound (C-125) to grip plates, doublers, abrasive strips, spar doublers, and trailing edge doublers on upper and lower surfaces of blades. R1/R2		

SCHEDULED INSPECTIONS

5-14. 150-HOUR INSPECTION

DATA REFERENCE	INSPECTION TASK DESCRIPTION	INITIAL MECH	INITIAL OTHER
	DATE: _____ **W.O.** _____ **FACILITY:** _____ **HELICOPTER S/N:** _____ **REGISTRY NO.:** _____ **TOTAL TIME:** _____ **SIGNATURE:** _____		
	To be performed every 150 hours of operating time or a minimum of once every 12 months, whichever comes first.		
	GENERAL		
	1. Log book — Review for recorded discrepancies. Correct discrepancies on installed equipment.		
	2. Make sure all applicable and required special inspections, Alert Service Bulletins (ASB), and Airworthiness Directives (AD) are accomplished.		
Chapter 99	**3.** Comply with Scheduled Inspections, Special Inspections, and required tests for all installed kits (refer to appropriate kit).		
Chapter 4	**4.** Replace all limited life components that have completed published operating limits.		
Paragraph 5-56	**5.** Overhaul all components that have completed published overhaul periods.		
	6. Check all exposed electrical wiring for worn or frayed cables, loose or broken clamps and fasteners.		
Rolls-Royce 250-C30 Series Operation and Maintenance Manual, 14W2	**7.** Perform applicable engine inspection.		

SCHEDULED INSPECTIONS

5-14. 150-HOUR INSPECTION (CONT)

DATA REFERENCE	INSPECTION TASK DESCRIPTION	INITIAL MECH	INITIAL OTHER
Chapter 12	**8.** Lubricate helicopter components.		
	DETAIL		
Chapter 25	**1.** Inspect seat cushions and seat backs for tears, excessive deterioration, and security of attachment. F1/F2, F3/F4		
Chapter 25	**2.** Inspect seat assemblies for security of attachment. Examine crew seats attenuation indicators if applicable. F1/F2, F3/F4		
Chapter 25	**3.** Inspect safety belts and shoulder harnesses for deterioration and security of attachment. F1/F2, F3/F4		
Chapter 52	**4.** Inspect crew doors, passenger doors, and baggage compartment doors for corrosion damage, distortion, positive locking mechanisms, seals for tears or separations, and doors for security of attachment. F1/F2, F3/F4		
Chapter 26	**5.** Inspect cabin fire extinguisher for security and condition, damage, corrosion, and quick opening clamp for operation and security. F1/F2		
Chapter 11 Chapter 95 BHT-230-FM-1	**6.** Inspect placards and instrument panel decals, and all instrument markings for appearance and legibility. F1/F2		
Chapter 96	**7.** Remove battery. Inspect vent lines for obstructions or damage, and clean battery mounting area prior to installing a serviceable battery. F1/F2		
Chapter 32	**8.** Inspect nose compartment electrical components for condition and security of mounting, all electrical harnesses and cables for frayed wires, loose or broken clamps and fasteners. Inspect nose door for obvious damage and security of latching. F1/F2		
Chapter 95	**9.** Inspect pitot tube(s) for security of attachment. F1/F2		
Chapter 67 BHT-ALL-SPM	**10.** Inspect roof mounted cyclic and collective shaft assemblies and control tubes for bearing binding, corrosion or mechanical damage, wear, and security of attachment. F5/F6		

SCHEDULED INSPECTIONS

5-14. 150-HOUR INSPECTION (CONT)

DATA REFERENCE	INSPECTION TASK DESCRIPTION	INITIAL MECH	INITIAL OTHER
	NOTE Examine inspection window(s) and/or glass(es) for cracking and discoloration. If either of these conditions are present, the part must be removed and replaced prior to returning helicopter for service.		
Chapter 29	**11.** Inspect hydraulic lines for leaks, system PC-1 and PC-2 reservoirs for proper level and discoloration of fluid, and module for differential pressure indication. Check for chafe guard deterioration, and verify flexible hoses are in satisfactory condition and exhibit no indications of chafing. F5/F6		
BHT-230-CR&O-2	**12.** Inspect hydraulic actuator support attaching nuts for proper torque. R1.		
Chapter 62	**13.** Visually inspect the outboard and inboard collective lever idler link attachment points for condition in area of lugs in transmission top case. R1		
Chapter 62	**14.** Inspect cyclic and collective control levers, swashplate assembly, drive assembly, and links for evidence of damage, security, and corrosion. Inspect walking beam pitch change bearings, ensuring that seals and shields are in place and pitch link clevis is properly aligned with walking beam. If seals and/or shields are missing or loose, bearing must be replaced. R1		
BHT-230-CR&O-2	**15.** Inspect main rotor hub for damage and security, static stops for damage from hard mast contact, and trunnion shims for condition. Inspect yoke for condition in area around flapping bearing attachment bushings. Inspect pendulum dampers for freedom of movement. R1		
Chapter 62 BHT-230-CR&O-2	**16.** For all main rotor hub assemblies, verify torque of main rotor grip(s) retaining bolts/nuts. Apply 100 foot-pounds (135 Nm) of torque to the nut, in the tightening direction. Provided 100 foot-pounds (135 Nm) of torque is reached without movement of the nut, torque the bolt/nut to 125 foot-pounds (169 Nm). If any nut moves before 100 foot-pounds (135 Nm) of torque is reached, remove grip from main rotor hub assembly. Inspect/repair pitch horn and grip assemblies. R1		

SCHEDULED INSPECTIONS

5-14. 150-HOUR INSPECTION (CONT)

DATA REFERENCE	INSPECTION TASK DESCRIPTION	INITIAL MECH	INITIAL OTHER
BHT-230-CR&O-2	**17.** Visually inspect the accessible portion of the main rotor elastomeric pitch axis bearings, trunnion bearings, and flapping springs for evidence of delamination or loss of elastomer.		
Chapter 62	**18.** Inspect main rotor blades for obvious damage and for cleanliness. R1 **NOTE** Examine inspection window(s) and/or glass(es) for cracking and discoloration. If either of these conditions are present, the part must be removed and replaced prior to returning helicopter for service.		
Chapter 63	**19.** Inspect transmission for evidence of oil leakage and correct fluid level. F5/F6		
Chapter 63	**20.** Remove transmission chip detectors. Inspect and clean detectors and test electrical circuits. Install chip detectors. R1		
Chapter 63	**21.** Inspect main driveshafts overtemperature indicators (TEMP-PLATES) on transmission-end and engine-end driveshaft couplings for evidence of overheating (discoloration) and grease leakage. R1		
Chapter 65 BHT-230-CR&O-3	**22.** Inspect tail rotor driveshaft coupling overtemperature indicators (TEMP-PLATES) for evidence of overheating (discoloration) and grease leakage. R1		
Chapter 63	**23.** Inspect rotor brake assembly for evidence of hydraulic leakage, security of attachment, and excessive wear of brake linings. Check brake disc for damage. Check reservoir for fluid level and discoloration. R1/F6 **NOTE** Examine inspection window(s) and/or glass(es) for cracking and discoloration. If either of these conditions are present, the part must be removed and replaced prior to returning helicopter for service.		
Chapter 12 Chapter 79	**24.** Inspect right and left engine oil tanks and lines for evidence of leakage. Check for proper quantity of oil. F5/F6		

SCHEDULED INSPECTIONS

5-14. 150-HOUR INSPECTION (CONT)

DATA REFERENCE	INSPECTION TASK DESCRIPTION	INITIAL MECH	INITIAL OTHER
Chapter 63	**25.** Inspect right and left nodal beam assembly as follows: **a.** Flexure assembly for cracks in fiberglass, shear pad debond/delamination, and security. F5/F6 **b.** Cam bearing for evidence of grease loss, overheating, and grease seal condition. F5/F6 **c.** Weight and cam arms for indications of misalignment and chafing. F5/F6 **d.** Restraint arms and lift links for security, damage, and elastomeric bearings for obvious damage. F5/F6		
Chapter 63	**26.** Inspect the left longitudinal isolation mount and support for damage and security. F5		
Chapter 63	**27.** Inspect the right longitudinal isolation mount and support, and the lateral isolation mount and support for damage and security. F6 **CAUTION** INGESTION OF BROKEN INLET SCREEN SEGMENTS CAN CAUSE FOREIGN OBJECT DAMAGE TO ENGINE COMPRESSOR SECTION.		
Chapter 71	**28.** Inspect both engine inlet screens for damage. F5/F6		
Chapter 71	**29.** Inspect all firewalls and fireshields for cracks, distortion, loose or missing rivets, broken spot welds, deteriorating seals, and sealant. E1/E2		
Chapter 71	**30.** Inspect left power plant area for evidence of fuel and oil leaks, flexible and rigid fuel and oil lines for wear, chafing, damage, and security of attachment. E1		
Chapter 71	**31.** Inspect left engine mounts and accessories for damage and security of attachment. E1		
Chapter 76	**32.** Inspect left engine throttle control housing, push rod, and lever for wear or lost motion and for security of attachment. E1		

SCHEDULED INSPECTIONS

5-14. 150-HOUR INSPECTION (CONT)

DATA REFERENCE	INSPECTION TASK DESCRIPTION	INITIAL MECH	INITIAL OTHER
Chapter 63	**33.** Inspect left oil cooler blower driveshaft and couplings for condition and security. Check discs for cracks radiating from bolt holes, corrosion, wrinkles, or other evidence of overstress. E1		
Chapter 71 BHT-230-CR&O-V.2	**34.** Inspect left oil cooler blower for obstruction, cleanliness, damage, and security. E1		
Chapter 65	**35.** Remove the left aft fairing assembly and inspect the forward tail rotor driveshaft hanger assembly for security of attachment, cracks at mounting ears, and corrosion or mechanical damage. Check bearing for evidence of grease seal leakage and discoloration caused by overheating. E1		
Chapter 65	**36.** Inspect forward tail rotor driveshaft hanger coupling disc assembly for cracks radiating from bolt holes, corrosion, wrinkles, or other evidence of overstress. E1		
Chapter 63 Chapter 79	**37.** Inspect transmission and engine oil coolers for obstructions, security, and evidence of oil leakage. E1/E2		
Chapter 29 Chapter 67	**38.** Remove access panel from bottom of aft fuselage and inspect bellcrank and directional control hydraulic actuator supports for corrosion and mechanical damage. Inspect actuator for hydraulic leakage, bearing wear, and security of attachment. F3/F4 **NOTE** Examine inspection window(s) and/or glass(es) for cracking and discoloration. If either of these conditions are present, the part must be removed and replaced prior to returning helicopter for service.		
Chapter 26	**39.** Inspect right and left engine fire bottles for proper pressure indication. F3/F4		
Chapter 65	**40.** Remove forward and aft tail rotor driveshaft covers and inspect hanger assemblies for security of attachment, cracks at mounting ears, and corrosion or mechanical damage. Check bearings for evidence of grease seal leakage and discoloration caused by overheating. T1/T2		

SCHEDULED INSPECTIONS

5-14. 150-HOUR INSPECTION (CONT)

DATA REFERENCE	INSPECTION TASK DESCRIPTION	INITIAL MECH	INITIAL OTHER
Chapter 65	**41.** Inspect driveshaft hanger coupling discs and the disc at the tail rotor gearbox input quill for cracks radiating from bolt holes, corrosion, wrinkles, or other evidence of overstress. T1/T2		
Chapter 53	**42.** Visually inspect horizontal stabilizer auxiliary fins for obvious damage and security of attachment. T1/T2		
Chapter 53	**43.** Visually inspect upper and lower surface of stabilizer for crack(s) indications immediately adjacent to stabilizer support attaching stabilizer to tailboom. T1/T2		
Chapter 53	**44.** Inspect tail rotor guard and tail skid for obvious damage and security of attachment. T1/T2		
	45. Inspect vertical fin assembly for damage. T1/T2		
	CAUTION HARDWARE AND TORQUE REQUIREMENTS OF THE VERTICAL FIN INSTALLATION ARE AFFECTED BY ACCOMPLISHMENT OF TB 230-98-23.		
Chapter 53	**46.** Inspect the vertical fin attachment bolts/nuts for proper torque as follows: **a.** For helicopters prior to TB 230-98-23, torque the nut in the tightening direction while restraining the bolt head. If 90 inch-pounds (10 Nm) of torque is reached without nut movement, increase the torque to 110 inch-pounds (12.5 Nm) of torque. If the nut moves below 90 inch-pounds (10 Nm) of torque, proceed with 2-year Inspection. **b.** For helicopters after TB 230-98-23, torque the nut in the tightening direction while restraining the bolt head. If 130 inch-pounds (14.5 Nm) of torque is reached without nut movement, increase torque to 160 inch-pounds (18 Nm) of torque. If the nut moves below 130 inch-pounds (14.5 Nm), proceed with 2-year Inspection.		

SCHEDULED INSPECTIONS

5-14. 150-HOUR INSPECTION (CONT)

DATA REFERENCE	INSPECTION TASK DESCRIPTION	INITIAL MECH	INITIAL OTHER
	NOTE Examine inspection window(s) and/or glass(es) for cracking and discoloration. If either of these conditions are present, the part must be removed and replaced prior to returning helicopter for service.		
Chapter 12 Chapter 65	**47.** Remove tail rotor gearbox fairing and inspect tail rotor gearbox for oil leakage, mechanical or corrosion damage, and security of mounting. Check for proper oil level. T1/T2		
Chapter 65	**48.** Remove tail rotor gearbox chip detector, clean and inspect detector, and test electrical circuit. R2		
	49. Inspect tail rotor gearbox retaining nuts for proper torque.		
	50. Inspect tail rotor pitch control assembly as follows:		
	a. Check for excessive radial play between the pitch control assembly and the tail rotor gearbox output shaft due to a worn or debonded guide bearing. Radial play in excess of 0.018 inch (0.5080 mm) is considered excessive.		
	b. Check for worn areas on the tail rotor gearbox output shaft wear sleeve.		
	c. Check for worn or rough crosshead bearing set.		
	d. Check for rough or worn counterweight bellcrank bearings.		
	e. Check for worn inner race in the tail rotor idler assembly.		
	f. Check for unbonded bearing in the upper leg of tail rotor input lever assembly.		
	g. Check for worn bearings in the tail rotor pitch links.		

SCHEDULED INSPECTIONS

5-14. 150-HOUR INSPECTION (CONT)

DATA REFERENCE	INSPECTION TASK DESCRIPTION	INITIAL MECH	INITIAL OTHER
	NOTE This inspection is applicable to tail rotor hub and blades assembly prior to upgrade per TB 230-06-40 (Part II).		
	51. Inspect tail rotor blades pitch change bearings as follows:		
	a. Without removing the blade, clean exposed areas of pitch change bearings.		
BHT-230-CR&O-3	**b.** With the blade bolts torqued to the highest value of torque range, visually inspect each bearing inner member neck area (full 360°) for cracks. If cracks are found, replace both bearings in blade.		
BHT-230-CR&O-3	**c.** Visually inspect chamfered washers installed in direct contact with the outboard surface of the yoke for deformation. Deformed washers must be replaced.		
Chapter 64	**52.** Inspect tail rotor hub and blades for cleanliness, visible damage to blades, evidence of wear or excessive play in pitch change bearings and trunnion bearings, and pitch horn for security. R2		
BHT-230-CR&O-3	**53.** Inspect sealant applied at the junction of the tail rotor bearing(s) sleeve(s) and the spar on both sides of the blade for condition. Replace or reapply as required.		
Chapter 64	**54.** Inspect tail rotor hub and blades assembly retaining nut for proper torque. R2		
Chapter 71	**55.** Inspect right power plant area for evidence of fuel and oil leaks, flexible and rigid fuel and oil lines for wear, chafing, damage, and security of attachment. E2		
Chapter 71	**56.** Inspect right engine mounts and accessories for damage and security of attachment. E2		
Chapter 76	**57.** Inspect right engine throttle control push rod, lever, and bellcrank for lost motion and security of attachment. E2		

SCHEDULED INSPECTIONS

5-14. 150-HOUR INSPECTION (CONT)

DATA REFERENCE	INSPECTION TASK DESCRIPTION	INITIAL MECH	INITIAL OTHER
Chapter 63	**58.** Inspect right oil cooler blower driveshaft and couplings for condition and security. Check discs for cracks radiating from bolt holes, corrosion, wrinkles or other evidence of overstress. E2		
Chapter 71 BHT-230-CR&O-V.2	**59.** Inspect right oil cooler blower for obstruction, cleanliness, damage, and security. E2		

SCHEDULED INSPECTIONS

5-15. 600-HOUR INSPECTION

DATA REFERENCE	INSPECTION TASK DESCRIPTION	INITIAL MECH	INITIAL OTHER
	DATE: _____ **W.O.** _____ **FACILITY:** _____ **HELICOPTER S/N:** _____ **REGISTRY NO.:** _____ **TOTAL TIME:** _____ **SIGNATURE:** _____		
	To be performed every 600 hours of operating time or a minimum of once every 12 months, whichever comes first.		
	DETAIL		
	1. Inspect first aid kit contents. Replace any items that are damaged or time expired. Replace any items with deteriorated packaging. F2		
Chapter 12 Chapter 67	**2.** Remove left, center, and right bottom access panels beneath the crew compartment. Inspect all installed control tubes, links, rod end bearings, bellcranks, supports, and attachment bolts for corrosion, evidence of wear, and security of attachment. Inspect spring cartridges and rotary actuators for security. F1/F2		
Chapter 67	**3.** Check cyclic stick, collective stick, and tail rotor pedal minimum friction. Adjust if necessary. F2		
Chapter 12	**4.** Remove access panels along bottom centerline of fuselage to FS 356.00. F3/F4		
Chapter 67	**a.** Inspect directional control tubes, rod end bearings, bellcranks, supports, and attachment bolts for corrosion, evidence of wear, and security of attachments. F3/F4		
	b. Check wiring bundles for security and evidence of chafing. Visually inspect all exposed structure for corrosion, distortion, or cracks. F3/F4		

SCHEDULED INSPECTIONS

5-15. 600-HOUR INSPECTION (CONT)

DATA REFERENCE	INSPECTION TASK DESCRIPTION	INITIAL MECH	INITIAL OTHER
Chapter 29	**c.** Inspect directional control actuator for leaks and security of attachment, and FS 340.00 bulkhead structure for distortion or cracks. F3/F4		
Chapter 67 BHT-ALL-SPM	**5.** Open control tunnel access in the canted bulkhead behind the pilot station. Inspect the lower and upper cyclic and collective pitch control bellcranks for bearing security of attachment, corrosion or mechanical damage to clevises, and security of attachment to supports and control tube bearings. F5/F6		
Chapter 25	**6.** Inspect emergency exit windows in the passenger doors as follows after removing interior trim from around windows: F3/F4		
Chapter 52	**a.** Visually inspect window retainer to door frame bond. Replace the retainer if it is not securely bonded to the frame at all points except at the two lower corners. F3/F4		
	b. Visually inspect the inboard side of all rubber retainers. Any nicks or cracks in the retainer is cause for replacement of the retainer. F3/F4		
	c. Check that all filler strips and pull tab are firmly seated in their retainer grooves. F3/F4		
Chapter 25	**d.** Install interior trim. F3/F4		
Chapter 7 Chapter 32	**7.** Inspect retractable landing gear, if applicable, as follows:		
	a. Jack helicopter clear of ground and cycle landing gear. Check for binding, excessive cycle time, proper light operation, and proximity switch operation and adjustment. Check nose gear centering actuator for correct pressure.		
	b. Perform emergency drop check.		
	c. Remove oleo inflation valve and check for indication of hydraulic fluid.		
Chapter 53	**8.** Inspect horizontal stabilizer center area as follows:		
	a. Remove upper support assembly. Save attaching hardware.		

SCHEDULED INSPECTIONS

5-15. 600-HOUR INSPECTION (CONT)

DATA REFERENCE	INSPECTION TASK DESCRIPTION	INITIAL MECH	INITIAL OTHER
	b. Clean upper surface of stabilizer. **NOTE** Surface must be free of all dirt and residue. **c.** With bright light, inspect upper surface for any cracks, corrosion, or working rivets. **d.** If no cracks, corrosion, or working rivets are located, install support assembly. **e.** Remove lower support assembly. Save attaching hardware. **f.** Clean lower surface of stabilizer. **g.** With bright light, inspect lower surface for any cracks, corrosion, or working rivets. **h.** If no cracks, corrosion, or working rivets are located, install support assembly.		
Chapter 67	**9.** Remove aft right fuselage access panel and inspect control tube, bellcrank, and support assembly for security of attachment, corrosion or mechanical damage, and excessively worn bearings and clevises. F4		
Chapter 67 BHT-230-CR&O-4	**10.** Remove and inspect tail rotor control tube, nylatron sleeves and heat shrink (if installed) at four areas where tube contacts tailboom fairleads. T1/T2		
Chapter 65	**11.** Inspect tail rotor driveshaft hanger bearings for roughness by disconnecting shaft from transmission and tail rotor gearbox. Rotate by hand while feeling hangers. Verify torque of tail rotor hanger splined adapter nut. T1/T2		
BHT-230-CR&O-3	**12.** Inspect tail rotor blade attaching bolts/nuts for proper torque. R2		
Chapter 32	**13.** Remove the fairing cover plates and examine the wing(s) to fuselage attachment points for corrosion, looseness and damage. Check torque of attaching bolts/nuts.		

SCHEDULED INSPECTIONS

5-15. 600-HOUR INSPECTION (CONT)

DATA REFERENCE	INSPECTION TASK DESCRIPTION	INITIAL MECH	INITIAL OTHER
Chapter 52	**14.** Remove baggage compartment floor and examine the following: **a.** Examine surrounding aft fuselage structure for corrosion and damage. **b.** Examine wiring bundles for chafing. Make sure they are correctly attached. **c.** Examine the environmental control unit for general condition. Make sure it is correctly attached. Examine bleed air tubing connection for leakage. Make sure all tubes and connectors are securely attached. **d.** If installed, examine auxiliary fuel system components, wiring and tubing for corrosion, chafing and correct attachment.		

SCHEDULED INSPECTIONS

5-16. PROGRESSIVE INSPECTION — EVENT 1

DATA REFERENCE	INSPECTION TASK DESCRIPTION	INITIAL MECH	INITIAL OTHER
	DATE: _____ **W.O.** _____ **FACILITY:** _____ **HELICOPTER S/N:** _____ **REGISTRY NO.:** _____ **TOTAL TIME:** _____ **SIGNATURE:** _____		
	GENERAL		
Paragraph 5-13	**1.** Perform a complete 50-hour inspection.		
	DETAIL		
	NOTE Examine inspection window(s) and/or glass(es) for cracking and discoloration. If either of these conditions are present, the part must be removed and replaced prior to returning helicopter for service.		
Chapter 26	**1.** Inspect right and left engine fire bottles for proper pressure indication. F3/F4		
Chapter 29 Chapter 67	**2.** Remove access panel from bottom of aft fuselage and inspect bellcrank and directional control hydraulic actuator supports for corrosion and mechanical damage. Inspect actuator for hydraulic leakage, bearing wear, and security of attachment. F3/F4		
Chapter 65	**3.** Remove the left aft fairing assembly and inspect the forward tail rotor driveshaft hanger assembly for security of attachment, cracks at mounting ears, and corrosion or mechanical damage. Check bearing for evidence of grease seal leakage and discoloration caused by overheating. E1		

SCHEDULED INSPECTIONS

5-16. PROGRESSIVE INSPECTION — EVENT 1 (CONT)

DATA REFERENCE	INSPECTION TASK DESCRIPTION	INITIAL MECH	INITIAL OTHER
Chapter 65	**4.** Inspect forward tail rotor driveshaft hanger coupling disc assembly for cracks radiating from bolt holes, corrosion, wrinkles, or other evidence of overstress. E1		
Chapter 63 Chapter 79	**5.** Inspect transmission and engine oil coolers for obstruction, security, and evidence of oil leakage. E1/E2		
Chapter 65	**6.** Remove forward and aft tail rotor driveshaft covers and inspect hanger assemblies for security of attachment, cracks at mounting ears, and corrosion or mechanical damage. Check bearings for evidence of grease seal leakage and discoloration caused by overheating. T1/T2		
Chapter 65	**7.** Inspect driveshaft hanger coupling discs and the disc at the tail rotor gearbox input quill for cracks radiating from bolt holes, corrosion, wrinkles, or other evidence of overstress. T1/T2		
Chapter 53	**8.** Visually inspect horizontal stabilizer auxiliary fins for obvious damage and security of attachment. T1/T2		
Chapter 53	**9.** Visually inspect upper and lower surface of stabilizer for indications of cracks immediately adjacent to stabilizer support attaching stabilizer to tailboom. T1/T2		
Chapter 53	**10.** Inspect tail rotor guard and tail skid for obvious damage and security of attachment. T1/T2		
	11. Inspect vertical fin assembly for damage. T1/T2		
	CAUTION HARDWARE AND TORQUE REQUIREMENTS OF THE VERTICAL FIN INSTALLATION ARE AFFECTED BY ACCOMPLISHMENT OF TB 230-98-23.		
Chapter 53	**12.** Inspect the vertical fin attachment bolts/nuts for proper torque as follows:		

SCHEDULED INSPECTIONS

5-16. PROGRESSIVE INSPECTION — EVENT 1 (CONT)

DATA REFERENCE	INSPECTION TASK DESCRIPTION	INITIAL MECH	INITIAL OTHER
	a. For helicopters prior to TB 230-98-23, torque the nut in the tightening direction while restraining the bolt head. If 90 inch-pounds (10 Nm) of torque is reached without nut movement, increase the torque to 110 inch-pounds (12.5 Nm) of torque. If the nut moves below 90 inch-pounds (10 Nm) of torque, proceed with 2-year Inspection. **b.** For helicopters after TB 230-98-23, torque the nut in the tightening direction while restraining the bolt head. If 130 inch-pounds (14.5 Nm) of torque is reached without nut movement, increase torque to 160 inch-pounds (18 Nm) of torque. If the nut moves below 130 inch-pounds (14.5 Nm), proceed with 2-year Inspection. **NOTE** Examine inspection window(s) and/or glass(es) for cracking and discoloration. If either of these conditions are present, the part must be removed and replaced prior to returning helicopter for service.		
Chapter 12 Chapter 65	**13.** Remove tail rotor gearbox fairing and inspect tail rotor gearbox for oil leakage, mechanical or corrosion damage, and security of mounting. Check for proper oil level. T1/T2		
Chapter 65	**14.** Remove tail rotor gearbox chip detector. Inspect and clean detector and test electrical circuit. Install chip detector. R2 **15.** Inspect tail rotor gearbox retaining nuts for proper torque. **16.** Inspect tail rotor pitch control assembly as follows: **a.** Check for excessive radial play between the pitch control assembly and the tail rotor gearbox output shaft due to a worn or debonded guide bearing. Radial play in excess of 0.018 inch (0.5080 mm) is considered excessive. **b.** Check for worn areas on the tail rotor gearbox output shaft wear sleeve. **c.** Check for worn or rough crosshead bearing set. **d.** Check for rough or worn counterweight bellcrank bearings.		

SCHEDULED INSPECTIONS

5-16. PROGRESSIVE INSPECTION — EVENT 1 (CONT)

DATA REFERENCE	INSPECTION TASK DESCRIPTION	INITIAL MECH	INITIAL OTHER
	e. Check for worn inner race in the tail rotor idler assembly.		
	f. Check for unbonded bearing in the upper leg of tail rotor input lever assembly.		
	g. Check for worn bearings in the tail rotor pitch links.		
	NOTE This inspection is applicable to tail rotor hub and blades assembly prior to upgrade per TB 230-06-40 (Part II).		
	17. Inspect tail rotor blades pitch change bearings as follows:		
	a. Without removing the blade, clean exposed areas of pitch change bearings.		
BHT-230-CR&O-3	**b.** With the blade bolts torqued to the highest value of torque range, visually inspect each bearing inner member neck area (full 360°) for cracks. If cracks are found, replace both bearings in blade.		
BHT-230-CR&O-3	**c.** Visually inspect chamfered washers installed in direct contact with the outboard surface of the yoke for deformation. Deformed washers must be replaced.		
Chapter 64	**18.** Inspect tail rotor hub and blades for cleanliness, visible damage to blades, evidence of wear or excessive play in pitch change bearings, and trunnion bearings and pitch horn for security. R2		
BHT-230-CR&O-3	**19.** Inspect sealant applied at the junction of the tail rotor bearing(s) sleeve(s) and the spar on both sides of the blade for condition. Replace or reapply as required.		
Chapter 64	**20.** Inspect tail rotor hub and blades assembly retaining nut for proper torque. R2		

SCHEDULED INSPECTIONS

5-17. PROGRESSIVE INSPECTION — EVENT 2

DATA REFERENCE	INSPECTION TASK DESCRIPTION	INITIAL MECH	INITIAL OTHER
	DATE: _____ **W.O.** _____ **FACILITY:** _____ **HELICOPTER S/N:** _____ **REGISTRY NO.:** _____ **TOTAL TIME:** _____ **SIGNATURE:** _____		
	GENERAL		
Paragraph 5-13	**1.** Perform a complete 50-hour inspection.		
	DETAIL		
Chapter 63	**1.** Inspect right and left nodal beam assembly as follows: **a.** Flexure assembly for cracks in fiberglass, shear pad debond/delamination, and security. F5/F6 **b.** Cam bearing for evidence of grease loss, overheating, and grease seal condition. F5/F6 **c.** Weight and cam arms for indications of misalignment and chafing. F5/F6 **d.** Restraint arms and lift links for security, damage, and elastomeric bearings for obvious damage. F5/F6 **NOTE** Examine inspection window(s) and/or glass(es) for cracking and discoloration. If either of these conditions are present, the part must be removed and replaced prior to returning helicopter for service.		
Chapter 63	**2.** Inspect transmission for evidence of oil leakage and correct fluid level. F5/F6		

SCHEDULED INSPECTIONS

5-17. PROGRESSIVE INSPECTION — EVENT 2 (CONT)

DATA REFERENCE	INSPECTION TASK DESCRIPTION	INITIAL MECH	INITIAL OTHER
Chapter 63	**3.** Remove transmission chip detectors. Inspect and clean detectors and test electrical circuits. Install chip detectors. R1		
Chapter 63	**4.** Inspect the left longitudinal isolation mount and support for damage and security. F5/F6		
Chapter 63	**5.** Inspect the right longitudinal isolation mount and support, and the lateral isolation mount and support for damage and security. F6		
Chapter 63	**6.** Inspect rotor brake assembly for evidence of hydraulic leakage, security of attachment, and excessive wear of brake linings. Check brake disc for damage. Check reservoir for fluid level and discoloration. R1/F6		
Chapter 65 BHT-230-CR&O-3	**7.** Inspect tail rotor driveshaft coupling overtemperature indicators (TEMP-PLATES) for evidence of overheating (discoloration) and grease leakage. R1		
Chapter 63	**8.** Inspect main driveshafts overtemperature indicators (TEMP-PLATES) on transmission-end and engine-end driveshaft couplings for evidence of overheating (discoloration) and grease leakage. R1 **NOTE** Examine inspection window(s) and/or glass(es) for cracking and discoloration. If either of these conditions are present, the part must be removed and replaced prior to returning helicopter for service.		
Chapter 12 Chapter 79	**9.** Inspect right and left engine oil tanks and lines for evidence of leakage. Check for proper quantity of oil. F5/F6		
Chapter 63	**10.** Visually inspect the outboard and inboard collective lever idler link attachment points for condition in area of lugs in transmission top case. R1		
BHT-230-CR&O-2	**11.** Inspect hydraulic actuator support attaching nuts for proper torque. R1		

SCHEDULED INSPECTIONS

5-17. PROGRESSIVE INSPECTION — EVENT 2 (CONT)

DATA REFERENCE	INSPECTION TASK DESCRIPTION	INITIAL MECH	INITIAL OTHER
Chapter 62	**12.** Inspect cyclic and collective control levers, swashplate assembly, drive assembly and links for evidence of damage, security, and corrosion. Inspect walking beam pitch change bearings, ensuring that seals and shields are in place and pitch link clevis is properly aligned with walking beam. If seals and/or shields are missing or loose, bearing must be replaced. R1		
BHT-230-CR&O-2	**13.** Inspect main rotor hub for damage and security, static stops for damage from hard mast contact, and trunnion shims for condition. Inspect yoke for condition in area around flapping bearing attachment bushings. Inspect pendulum dampers for freedom of movement. R1		
BHT-230-CR&O-2	**14.** Visually inspect the accessible portion of the main rotor elastomeric pitch axis bearings, trunnion bearings, and flapping springs for evidence of delamination or loss of elastomer. R1		
Chapter 62	**15.** Inspect main rotor blades for obvious damage and for cleanliness. R1		
Chapter 67 BHT-ALL-SPM	**16.** Inspect roof mounted cyclic and collective shaft assemblies and control tubes for bearing corrosion or mechanical damage, wear, and security of attachment. F5/F6 **NOTE** Examine inspection window(s) and/or glass(es) for cracking and discoloration. If either of these conditions are present, the part must be removed and replaced prior to returning helicopter for service.		
Chapter 29	**17.** Inspect hydraulic lines for leaks, system PC-1 and PC-2 reservoirs for proper level and discoloration of fluid, and module for differential pressure indication. Check for chafe guard deterioration, and verify flexible hoses are in satisfactory condition and exhibit no indications of chafing. F5/F6		
Chapter 7 Chapter 32	**18.** Inspect retractable landing gear, if applicable, as follows: **a.** Jack helicopter clear of ground and cycle landing gear. Check for binding, excessive cycle time, proper light operation and proximity switch operation and adjustment. Check nose gear centering actuator for correct pressure.		

SCHEDULED INSPECTIONS

5-17. PROGRESSIVE INSPECTION — EVENT 2 (CONT)

DATA REFERENCE	INSPECTION TASK DESCRIPTION	INITIAL MECH	INITIAL OTHER
	b. Perform emergency drop check. **c.** Remove oleo inflation valve and check for indication of hydraulic fluid.		

SCHEDULED INSPECTIONS

5-18. PROGRESSIVE INSPECTION — EVENT 3

DATA REFERENCE	INSPECTION TASK DESCRIPTION	INITIAL MECH	INITIAL OTHER
	DATE: _____ **W.O.** _____ **FACILITY:** _____ **HELICOPTER S/N:** _____ **REGISTRY NO.:** _____ **TOTAL TIME:** _____ **SIGNATURE:** _____		
	GENERAL		
Paragraph 5-13	**1.** Perform a complete 50-hour inspection.		
	DETAIL		
Chapter 96	**1.** Remove battery. Inspect vent lines for obstructions or damage, and clean battery mounting area prior to installing a serviceable battery. F1/F2		
Chapter 32	**2.** Inspect nose compartment electrical components for condition and security of mounting, all electrical harnesses and cables for frayed wires, loose or broken clamps and fasteners. Inspect nose door for obvious damage and security of latching. F1/F2		
Chapter 95	**3.** Inspect pitot tube(s) for security of attachment. F1/F2		
Chapter 52	**4.** Inspect crew doors, passenger doors, and baggage compartment doors for corrosion damage, distortion, positive locking mechanisms, seals for tears or separations, and doors for security of attachment. F1/F2, F3/F4		
Chapter 25	**5.** Inspect seat cushions and seat backs for tears, excessive deterioration, and security of attachment. F1/F2, F3/F4		
Chapter 25	**6.** Inspect seat assemblies for security of attachment. Examine crew seats attenuation indicators if applicable. F1/F2, F3/F4		

SCHEDULED INSPECTIONS

5-18. PROGRESSIVE INSPECTION — EVENT 3 (CONT)

DATA REFERENCE	INSPECTION TASK DESCRIPTION	INITIAL MECH	INITIAL OTHER
Chapter 25	**7.** Inspect safety belts and shoulder harnesses for deterioration and security of attachment. F1/F2, F3/F4		
Chapter 26	**8.** Inspect cabin fire extinguisher for security and condition, damage, corrosion, and quick opening clamp for operation and security. F1/ F2		
Chapter 11 Chapter 95 BHT-230-FM-1	**9.** Inspect placards and instrument panel decals, and all instrument markings for appearance and legibility. F1/F2		
	CAUTION INGESTION OF BROKEN INLET SCREEN SEGMENTS CAN CAUSE FOREIGN OBJECT DAMAGE TO ENGINE COMPRESSOR SECTION.		
Chapter 71	**10.** Inspect both engine inlet screens for damage. F5/F6		
Chapter 71	**11.** Inspect all firewalls and fireshields for cracks, distortion, loose or missing rivets, broken spot welds, deteriorating seals, and sealant. E1/E2		
Chapter 71	**12.** Inspect left power plant area for evidence of fuel and oil leaks, flexible and rigid fuel and oil lines for wear, chafing, damage, and security of attachment. E1		
Chapter 71	**13.** Inspect left engine mounts and accessories for damage and security of attachment. E1		
Chapter 76	**14.** Inspect left engine throttle control housing, push rod, and lever for wear or lost motion and for security of attachment. E1		
Chapter 63	**15.** Inspect left oil cooler blower driveshaft and couplings for condition and security. Check discs for cracks radiating from bolt holes, corrosion, wrinkles or other evidence of overstress. E1		
Chapter 71 BHT-230-CR&O-V.2	**16.** Inspect left oil cooler blower for obstruction, cleanliness, damage, and security. E1		

SCHEDULED INSPECTIONS

5-18. PROGRESSIVE INSPECTION — EVENT 3 (CONT)

DATA REFERENCE	INSPECTION TASK DESCRIPTION	INITIAL MECH	INITIAL OTHER
Chapter 71	**17.** Inspect right power plant area for evidence of fuel and oil leaks, flexible and rigid fuel and oil lines for wear, chafing, damage, and security of attachment. E2		
Chapter 71	**18.** Inspect right engine mounts and accessories for damage and security of attachment. E2		
Chapter 76	**19.** Inspect right engine throttle control push rod, lever, and bellcrank for lost motion and security of attachment. E2		
Chapter 63	**20.** Inspect right oil cooler blower driveshaft and couplings for condition and security. Check discs for cracks radiating from bolt holes, corrosion, wrinkles, or other evidence of overstress. E2		
Chapter 71 BHT-230-CR&O-V.2	**21.** Inspect right oil cooler blower for obstruction, cleanliness, damage, and security. E2		
Chapter 62 BHT-230CR&O-2	**22.** For all main rotor hub assemblies, verify torque of main rotor grip(s) retaining bolts/nuts. Apply 100 foot-pounds (135 Nm) of torque to the nut, in the tightening direction. Provided 100 foot-pounds (135 Nm) of torque is reached without movement of the nut, torque the bolt/nut to 125 foot-pounds (169 Nm). If any nut moves before 100 foot-pounds (135 Nm) of torque is reached, remove grip from main rotor hub assembly. Inspect/repair pitch horn and grip assemblies. R1		

SCHEDULED INSPECTIONS

5-19. PROGRESSIVE INSPECTION — EVENT 4

DATA REFERENCE	INSPECTION TASK DESCRIPTION	INITIAL MECH	INITIAL OTHER
	DATE: _____ **W.O.** _____ **FACILITY:** _____ **HELICOPTER S/N:** _____ **REGISTRY NO.:** _____ **TOTAL TIME:** _____ **SIGNATURE:** _____		
	GENERAL		
Paragraph 5-13	**1.** Perform a complete 50-hour inspection.		
	DETAIL		
	NOTE Examine inspection window(s) and/or glass(es) for cracking and discoloration. If either of these conditions are present, the part must be removed and replaced prior to returning helicopter for service.		
Chapter 26	**1.** Inspect right and left engine fire bottles for proper pressure indication. F3/F4		
Chapter 29 Chapter 67	**2.** Remove access panel from bottom of aft fuselage and inspect bellcrank and directional control hydraulic actuator supports for corrosion and mechanical damage. Inspect actuator for hydraulic leakage, bearing wear, and security of attachment. F3/F4		
Chapter 65	**3.** Remove the left aft fairing assembly and inspect the forward tail rotor driveshaft hanger assembly for security of attachment, cracks at mounting ears, and corrosion or mechanical damage. Check bearing for evidence of grease seal leakage and discoloration caused by overheating. E1		

SCHEDULED INSPECTIONS

5-19. PROGRESSIVE INSPECTION — EVENT 4 (CONT)

DATA REFERENCE	INSPECTION TASK DESCRIPTION	INITIAL MECH	INITIAL OTHER
Chapter 65	**4.** Inspect forward tail rotor driveshaft hanger coupling disc assembly for cracks radiating from bolt holes, corrosion, wrinkles, or other evidence of overstress. E1		
Chapter 63 Chapter 79	**5.** Inspect transmission and engine oil coolers for obstruction, security, and evidence of oil leakage. E1/E2		
Chapter 65	**6.** Remove forward and aft tail rotor driveshaft covers and inspect hanger assemblies for security of attachment, cracks at mounting ears, and corrosion or mechanical damage. Check bearings for evidence of grease seal leakage and discoloration caused by overheating. T1/T2		
Chapter 65	**7.** Inspect driveshaft hanger coupling discs and the disc at the tail rotor gearbox input quill for cracks radiating from bolt holes, corrosion, wrinkles, or other evidence of overstress. T1/T2		
Chapter 53	**8.** Visually inspect horizontal stabilizer auxiliary fins for obvious damage and security of attachment. T1/T2		
Chapter 53	**9.** Visually inspect upper and lower surface of stabilizer for indications of cracks immediately adjacent to stabilizer support attaching stabilizer to tailboom. T1/T2		
Chapter 53	**10.** Inspect horizontal stabilizer center area as follows: T1/T2 **a.** Remove upper support assembly. Save attaching hardware. **b.** Clean upper surface of stabilizer. **NOTE** Surface must be free of all dirt and residue. **c.** With bright light, inspect upper surface for any cracks, corrosion, or working rivets. **d.** If no cracks, corrosion, or working rivets are located, install upper support assembly. **e.** Remove lower support assembly. Save attaching hardware.		

SCHEDULED INSPECTIONS

5-19. PROGRESSIVE INSPECTION — EVENT 4 (CONT)

DATA REFERENCE	INSPECTION TASK DESCRIPTION	INITIAL MECH	INITIAL OTHER
	f. Clean lower surface of stabilizer.		
	g. With bright light, inspect lower surface for any cracks, corrosion, or working rivets.		
	h. If no cracks, corrosion, or working rivets are located, install support assembly.		
Chapter 53	**11.** Inspect tail rotor guard and tail skid for obvious damage and security of attachment. T1/T2		
	12. Inspect vertical fin assembly for damage. T1/T2		
	CAUTION HARDWARE AND TORQUE REQUIREMENTS OF THE VERTICAL FIN INSTALLATION ARE AFFECTED BY ACCOMPLISHMENT OF TB 230-98-23.		
Chapter 53	**13.** Inspect the vertical fin attachment bolts/nuts for proper torque as follows:		
	a. For helicopters prior to TB 230-98-23, torque the nut in the tightening direction while restraining the bolt head. If 90 inch-pounds (10 Nm) of torque is reached without nut movement, increase torque to 110 inch-pounds (12.5 Nm) of torque. If the nut moves below 90 inch-pounds (10 Nm) of torque, proceed with 2-year Inspection.		
	b. For helicopters after TB 230-98-23, torque the nut in the tightening direction while restraining the bolt head. If 130 inch-pounds (14.5 Nm) of torque is reached without nut movement, increase torque to 160 inch-pounds (18 Nm) of torque. If the nut moves below 130 inch-pounds (14.5 Nm), proceed with 2-year Inspection.		

SCHEDULED INSPECTIONS

5-19. PROGRESSIVE INSPECTION — EVENT 4 (CONT)

DATA REFERENCE	INSPECTION TASK DESCRIPTION	INITIAL MECH	INITIAL OTHER
	NOTE Examine inspection window(s) and/or glass(es) for cracking and discoloration. If either of these conditions are present, the part must be removed and replaced prior to returning helicopter for service.		
	14. Remove tail rotor gearbox fairing and inspect tail rotor gearbox for oil leakage, mechanical or corrosion damage, and security of mounting. Check for proper oil level. T1/T2		
Chapter 65	**15.** Remove tail rotor gearbox chip detector. Inspect and clean detector and test electrical circuit. Install chip detector. R2		
	16. Inspect tail rotor gearbox retaining nuts for proper torque.		
	17. Inspect tail rotor pitch control assembly as follows:		
	a. Check for excessive radial play between the pitch control assembly and the tail rotor gearbox output shaft due to a worn or debonded guide bearing. Radial play in excess of 0.018 inch (0.5080 mm) is considered excessive.		
	b. Check for worn areas on the tail rotor gearbox output shaft wear sleeve.		
	c. Check for worn or rough crosshead bearing set.		
	d. Check for rough or worn counterweight bellcrank bearings.		
	e. Check for worn inner race in the tail rotor idler assembly.		
	f. Check for unbonded bearing in the upper leg of tail rotor input lever assembly.		
	g. Check for worn bearings in the tail rotor pitch links.		
Chapter 64	**18.** Inspect tail rotor hub and blades for cleanliness, visible damage to blades, evidence of wear or excessive play in pitch change bearings and trunnion bearings, and pitch horn for security. R2		

SCHEDULED INSPECTIONS

5-19. PROGRESSIVE INSPECTION — EVENT 4 (CONT)

DATA REFERENCE	INSPECTION TASK DESCRIPTION	INITIAL MECH	INITIAL OTHER
BHT-230-CR&O-3	**19.** Inspect sealant applied at the junction of the tail rotor bearing(s) sleeve(s) and the spar on both sides of the blade for condition. Replace or reapply as required.		
Chapter 64	**20.** Inspect tail rotor hub and blades assembly retaining nut for proper torque. R2		
BHT-230-CR&O-3	**21.** Inspect tail rotor blade attaching bolts/nuts for proper torque. R2		
	NOTE This inspection is applicable to tail rotor hub and blades assembly prior to upgrade per TB 230-06-40 (Part II).		
	22. Inspect tail rotor blades pitch change bearings as follows:		
	a. Without removing the blade, clean exposed areas of pitch change bearings.		
BHT-230-CR&O-3	**b.** With the blade bolts torqued to the highest value of torque range, visually inspect each bearing inner member neck area (full 360°) for cracks. If cracks are found, replace both bearings in blade.		
BHT-230-CR&O-3	**c.** Visually inspect chamfered washers installed in direct contact with the outboard surface of the yoke for deformation. Deformed washers must be replaced.		

SCHEDULED INSPECTIONS

5-20. PROGRESSIVE INSPECTION — EVENT 5

DATA REFERENCE	INSPECTION TASK DESCRIPTION	INITIAL MECH	INITIAL OTHER
	DATE: _____ **W.O.** _____ **FACILITY:** _____ **HELICOPTER S/N:** _____ **REGISTRY NO.:** _____ **TOTAL TIME:** _____ **SIGNATURE:** _____		
	GENERAL		
Paragraph 5-13	**1.** Perform a complete 50-hour inspection.		
	DETAIL		
Chapter 63	**1.** Inspect right and left nodal beam assembly as follows: **a.** Flexure assembly for cracks in fiberglass, shear pad debond/delamination, and security. F5/F6 **b.** Cam bearing for evidence of grease loss, overheating, and grease seal condition. F5/F6 **c.** Weight and cam arms for indications of misalignment and chafing. F5/F6 **d.** Restraint arms and lift links for security, damage, and elastomeric bearings for obvious damage. F5/F6 **NOTE** Examine inspection window(s) and/or glass(es) for cracking and discoloration. If either of these conditions are present, the part must be removed and replaced prior to returning helicopter for service.		
Chapter 63	**2.** Inspect transmission for evidence of oil leakage and correct oil level. F5/F6		

SCHEDULED INSPECTIONS

5-20. PROGRESSIVE INSPECTION — EVENT 5 (CONT)

DATA REFERENCE	INSPECTION TASK DESCRIPTION	INITIAL MECH	INITIAL OTHER
Chapter 63	**3.** Remove transmission chip detectors. Inspect and clean detectors and test electrical circuits. Install chip detectors. R1		
Chapter 63	**4.** Inspect the left longitudinal isolation mount and support for damage and security. F5		
Chapter 63	**5.** Inspect the right longitudinal isolation mount and support, and the lateral isolation mount and support for damage and security. F6		
Chapter 63	**6.** Inspect rotor brake assembly for evidence of hydraulic leakage, security of attachment, and excessive wear of brake linings. Check brake disc for damage. Check reservoir for fluid level and discoloration. R1/F6		
Chapter 65	**7.** Inspect tail rotor driveshaft coupling overtemperature indicators (TEMP-PLATES) for evidence of overheating (discoloration) and grease leakage. R1		
Chapter 63	**8.** Inspect main driveshafts overtemperature indicators (TEMP-PLATES) on transmission-end and engine-end driveshaft couplings for evidence of overheating (discoloration) and grease leakage. R1 **NOTE** Examine inspection window(s) and/or glass(es) for cracking and discoloration. If either of these conditions are present, the part must be removed and replaced prior to returning helicopter for service.		
Chapter 12 Chapter 79	**9.** Inspect right and left engine oil tanks and lines for evidence of leakage. Check for proper quantity of oil. F5/F6		
Chapter 63	**10.** Visually inspect the outboard and inboard collective lever idler link attachment points for condition in area of lugs in transmission top case. R1		
BHT-230-CR&O-2	**11.** Inspect hydraulic actuator support attaching nuts for proper torque. R1		

SCHEDULED INSPECTIONS

5-20. PROGRESSIVE INSPECTION — EVENT 5 (CONT)

DATA REFERENCE	INSPECTION TASK DESCRIPTION	INITIAL MECH	INITIAL OTHER
Chapter 62	**12.** Inspect cyclic and collective control levers, swashplate assembly, drive assembly, and links for evidence of damage, security, and corrosion. Inspect walking beam pitch change bearings, ensuring that seals and shields are in place and pitch link clevis is properly aligned with walking beam. If seals and/or shields are missing or loose, bearing must be replaced. R1		
BHT-230-CR&O-2	**13.** Inspect main rotor hub for damage and security, static stops for damage from hard mast contact, and trunnion shims for condition. Inspect yoke for condition in area around flapping bearing attachment bushings. Inspect pendulum dampers for freedom of movement. R1		
BHT-230-CR&O-2	**14.** Visually inspect the accessible portion of the main rotor elastomeric pitch axis bearings, trunnion bearings, and flapping springs for evidence of delamination or loss of elastomer. R1		
Chapter 62	**15.** Inspect main rotor blades for obvious damage and for cleanliness. R1		
Chapter 67 BHT-ALL-SPM	**16.** Inspect roof mounted cyclic and collective shaft assemblies and control tubes for bearing corrosion or mechanical damage, wear, and security of attachment. F5/F6 **NOTE** Examine inspection window(s) and/or glass(es) for cracking and discoloration. If either of these conditions are present, the part must be removed and replaced prior to returning helicopter for service.		
Chapter 29	**17.** Inspect hydraulic lines for leaks, system PC-1 and PC-2 reservoirs for proper level and discoloration of fluid, and module of differential pressure indication. Check for chafe guard deterioration, and verify flexible hoses are in satisfactory condition and exhibit no indications of chafing. F5/F6		

SCHEDULED INSPECTIONS

5-21. PROGRESSIVE INSPECTION — EVENT 6

DATA REFERENCE	INSPECTION TASK DESCRIPTION	INITIAL MECH	INITIAL OTHER
	DATE: _____ **W.O.** _____ **FACILITY:** _____ **HELICOPTER S/N:** _____ **REGISTRY NO.:** _____ **TOTAL TIME:** _____ **SIGNATURE:** _____		
Paragraph 5-13	**GENERAL** **1.** Perform a complete 50-hour inspection.		
	DETAIL		
Chapter 96	**1.** Remove battery. Inspect vent lines for obstructions or damage, and clean battery mounting area prior to installing a serviceable battery. F1/ F2		
Chapter 32	**2.** Inspect nose compartment electrical components for condition and security of mounting, all electrical harnesses and cables for frayed wires, loose or broken clamps and fasteners. Inspect nose door for obvious damage and security of latching. F1/F2		
Chapter 95	**3.** Inspect pitot tube(s) for security of attachment. F1/F2		
Chapter 52	**4.** Inspect crew doors, passenger doors, and baggage compartment doors for corrosion damage, distortion, positive locking mechanisms, seals for tears or separations, and doors for security of attachment. F1/F2, F3/F4		
Chapter 25	**5.** Inspect seat cushions and seat backs for tears, excessive deterioration, and security of attachment. F1/F2, F3/F4		
Chapter 25	**6.** Inspect seat assemblies for security of attachment. Examine crew seats attenuation indicators if applicable. F1/F2, F3/F4		

SCHEDULED INSPECTIONS

5-21. PROGRESSIVE INSPECTION — EVENT 6 (CONT)

DATA REFERENCE	INSPECTION TASK DESCRIPTION	INITIAL MECH	INITIAL OTHER
Chapter 25	**7.** Inspect safety belts and shoulder harnesses for deterioration and security of attachment. F1/F2, F3/F4		
Chapter 26	**8.** Inspect cabin fire extinguisher for security and condition, damage, corrosion, and quick opening clamp for operation and security. F1/F2		
Chapter 11 Chapter 95 BHT-230-FM-1	**9.** Inspect placards and instrument panel decals, and all instrument markings for appearance and legibility. F1/F2		
	CAUTION INGESTION OF BROKEN INLET SCREEN SEGMENTS CAN CAUSE FOREIGN OBJECT DAMAGE TO ENGINE COMPRESSOR SECTION.		
Chapter 71	**10.** Inspect both engine inlet screens for damage. F5/F6		
Chapter 71	**11.** Inspect all firewalls and fireshields for cracks, distortion, loose or missing rivets, broken spot welds, deteriorating seals and sealant. E1/E2		
Chapter 71	**12.** Inspect left power plant area for evidence of fuel and oil leaks, flexible and rigid fuel and oil lines for wear, chafing, damage, and security of attachment. E1		
Chapter 71	**13.** Inspect left engine mounts and accessories for damage and security of attachment. E1		
Chapter 76	**14.** Inspect left engine throttle control housing, push rod, and lever for wear or lost motion and for security of attachment. E1		
Chapter 63	**15.** Inspect left oil cooler blower driveshaft and couplings for condition and security. Check discs for cracks radiating from bolt holes, corrosion, wrinkles, or other evidence of overstress. E1		
Chapter 71 BHT-230-CR&O-V.2	**16.** Inspect left oil cooler blower for obstruction, cleanliness, damage, and security. E1		

SCHEDULED INSPECTIONS

5-21. PROGRESSIVE INSPECTION — EVENT 6 (CONT)

DATA REFERENCE	INSPECTION TASK DESCRIPTION	INITIAL MECH	INITIAL OTHER
Chapter 71	**17.** Inspect right power plant area for evidence of fuel and oil leaks, flexible and rigid fuel and oil lines for wear, chafing, damage, and security of attachment. E2		
Chapter 71	**18.** Inspect right engine mounts and accessories for damage and security of attachment. E2		
Chapter 76	**19.** Inspect right engine throttle control push rod, lever, and bellcrank for lost motion and security of attachment. E2		
Chapter 63	**20.** Inspect right oil cooler blower driveshaft and couplings for condition and security. Check discs for cracks radiating from bolt holes, corrosion, wrinkles, or other evidence of overstress. E2		
Chapter 71 BHT-230-CR&O-V.2	**21.** Inspect right oil cooler blower for obstruction, cleanliness, damage, and security. E2		
Chapter 62 BHT-230-CR&O-2	**22.** For all main rotor hub assemblies, verify torque of main rotor grip(s) retaining bolts/nuts. Apply 100 foot-pounds (135 Nm) of torque to the nut, in the tightening direction. Provided 100 foot-pounds (135 Nm) of torque is reached without movement of the nut, torque the bolt/nut to 125 foot-pounds (169 Nm). If any nut moves before 100 foot-pounds (135 Nm) of torque is reached, remove grip from main rotor hub assembly. Inspect/repair pitch horn and grip assemblies. R1		

SCHEDULED INSPECTIONS

5-22. PROGRESSIVE INSPECTION — EVENT 7

DATA REFERENCE	INSPECTION TASK DESCRIPTION	INITIAL MECH	INITIAL OTHER
	DATE: _____ **W.O.** _____ **FACILITY:** _____ **HELICOPTER S/N:** _____ **REGISTRY NO.:** _____ **TOTAL TIME:** _____ **SIGNATURE:** _____		
	GENERAL		
Paragraph 5-13	**1.** Perform a complete 50-hour inspection.		
	DETAIL		
	NOTE Examine inspection window(s) and/or glass(es) for cracking and discoloration. If either of these conditions are present, the part must be removed and replaced prior to returning helicopter for service.		
Chapter 26	**1.** Inspect right and left engine fire bottles for proper pressure indication. F3/F4		
Chapter 29 Chapter 67	**2.** Remove access panel from bottom of aft fuselage and inspect bellcrank and directional control hydraulic actuator supports for corrosion and mechanical damage. Inspect actuator for hydraulic leakage, bearing wear, and security of attachment. F3/F4		
Chapter 65	**3.** Remove the left aft fairing assembly and inspect the forward tail rotor driveshaft hanger assembly for security of attachment, cracks at mounting ears, and corrosion or mechanical damage. Check bearing for evidence of grease seal leakage and discoloration caused by overheating. E1		

SCHEDULED INSPECTIONS

5-22. PROGRESSIVE INSPECTION — EVENT 7 (CONT)

DATA REFERENCE	INSPECTION TASK DESCRIPTION	INITIAL MECH	INITIAL OTHER
Chapter 65	**4.** Inspect forward tail rotor driveshaft hanger coupling disc assembly for cracks radiating from bolt holes, corrosion, wrinkles, or other evidence of overstress. E1		
Chapter 63 Chapter 79	**5.** Inspect transmission and engine oil coolers for obstruction, security, and evidence of oil leakage. E1/E2		
Chapter 65	**6.** Remove forward and aft tail rotor driveshaft covers and inspect hanger assemblies for security of attachment, cracks at mounting ears, and corrosion or mechanical damage. Check bearings for evidence of grease seal leakage and discoloration caused by overheating. T1/T2		
Chapter 65	**7.** Inspect driveshaft hanger coupling discs and the disc at the tail rotor gearbox input quill for cracks radiating from bolt holes, corrosion, wrinkles, or other evidence of overstress. T1/T2		
Chapter 65	**8.** Inspect tail rotor driveshaft hanger bearings for roughness by disconnecting shaft from transmission and tail rotor gearbox. Rotate by hand while feeling hangers. Verify torque of tail rotor hanger splined adapter nut. T1/T2		
Chapter 53	**9.** Visually inspect horizontal stabilizer auxiliary fins for obvious damage and security of attachment. T1/T2		
Chapter 53	**10.** Visually inspect upper and lower surface of stabilizer for indications of cracks immediately adjacent to stabilizer support attaching stabilizer to tailboom. T1/T2		
Chapter 53	**11.** Inspect tail rotor guard and tail skid for obvious damage and security of attachment. T1/T2		
	12. Inspect vertical fin assembly for damage. T1/T2 **CAUTION** HARDWARE AND TORQUE REQUIREMENTS OF THE VERTICAL FIN INSTALLATION ARE AFFECTED BY ACCOMPLISHMENT OF TB 230-98-23.		

SCHEDULED INSPECTIONS

5-22. PROGRESSIVE INSPECTION — EVENT 7 (CONT)

DATA REFERENCE	INSPECTION TASK DESCRIPTION	INITIAL MECH	INITIAL OTHER
Chapter 53	**13.** Inspect vertical fin attachment bolts/nuts for proper torque as follows: **a.** For helicopters prior to TB 230-98-23, torque the nut in the tightening direction while restraining the bolt head. If 90 inch-pounds (10 Nm) of torque is reached without nut movement, increase torque to 110 inch-pounds (12.5 Nm) of torque. If the nut moves below 90 inch-pounds (10 Nm) of torque, proceed with 2-year Inspection. **b.** For helicopters after TB 230-98-23, torque the nut in the tightening direction while restraining the bolt head. If 130 inch-pounds (14.5 Nm) of torque is reached without nut movement, increase torque to 160 inch-pounds (18 Nm) of torque. If the nut moves below 130 inch-pounds (14.5 Nm), proceed with 2-year Inspection.		
Chapter 67	**14.** Remove aft right fuselage access panel and inspect control tube, bellcrank, and support assembly for security of attachment, corrosion or mechanical damage, and excessively worn bearings and clevises. F4		
Chapter 67 BHT-230-CR&O-4	**15.** Remove and inspect tail rotor control tube, nylatron sleeves, and heat shrink (if installed) at four areas where tube contacts tailboom fairleads. T1/T2 **NOTE** Examine inspection window(s) and/or glass(es) for cracking and discoloration. If either of these conditions are present, the part must be removed and replaced prior to returning helicopter for service.		
Chapter 12 Chapter 65	**16.** Remove tail rotor gearbox fairing and inspect tail rotor gearbox for oil leakage, mechanical or corrosion damage, and security of mounting. Check for proper oil level. T1/T2		
Chapter 65	**17.** Remove tail rotor gearbox chip detector. Inspect and clean detector and test electrical circuit. Install chip detector. R2 **18.** Inspect tail rotor gearbox retaining nuts for proper torque.		

SCHEDULED INSPECTIONS

5-22. PROGRESSIVE INSPECTION — EVENT 7 (CONT)

DATA REFERENCE	INSPECTION TASK DESCRIPTION	INITIAL MECH	INITIAL OTHER
	19. Inspect tail rotor pitch control assembly as follows: **a.** Check for excessive radial play between the pitch control assembly and the tail rotor gearbox output shaft due to a worn or debonded guide bearing. Radial play in excess of 0.018 inch (0.5080 mm) is considered excessive. **b.** Check for worn areas on the tail rotor gearbox output shaft wear sleeve. **c.** Check for worn or rough crosshead bearing set. **d.** Check for rough or worn counterweight bellcrank bearings. **e.** Check for worn inner race in the tail rotor idler assembly. **f.** Check for unbonded bearing in the upper leg of tail rotor input lever assembly. **g.** Check for worn bearings in the tail rotor pitch links. **NOTE** This inspection is applicable to tail rotor hub and blades assembly prior to upgrade per TB 230-06-40 (Part II).		
	20. Inspect tail rotor blades pitch change bearings as follows: **a.** Without removing the blade, clean exposed areas of pitch change bearings.		
BHT-230-CR&O-3	**b.** With the blade bolts torqued to the highest value of torque range, visually inspect each bearing inner member neck area (full 360°) for cracks. If cracks are found, replace both bearings in blade.		
BHT-230-CR&O-3	**c.** Visually inspect chamfered washers installed in direct contact with the outboard surface of the yoke for deformation. Deformed washers must be replaced.		

SCHEDULED INSPECTIONS

5-22. PROGRESSIVE INSPECTION — EVENT 7 (CONT)

DATA REFERENCE	INSPECTION TASK DESCRIPTION	INITIAL MECH	INITIAL OTHER
Chapter 64	**21.** Inspect tail rotor hub and blades for cleanliness, visible damage to blades, evidence of wear or excessive play in pitch change bearings, and trunnion bearings and pitch horn for security. R2		
BHT-230-CR&O-3	**22.** Inspect sealant applied at the junction of the tail rotor bearing(s) sleeve(s) and the spar on both sides of the blade for condition. Replace ore reapply as required.		
Chapter 64	**23.** Inspect tail rotor hub and blades assembly retaining nut for proper torque. R2		

SCHEDULED INSPECTIONS

5-23. PROGRESSIVE INSPECTION — EVENT 8

DATA REFERENCE	INSPECTION TASK DESCRIPTION	INITIAL MECH	INITIAL OTHER
	DATE: _____ **W.O.** _____ **FACILITY:** _____ **HELICOPTER S/N:** _____ **REGISTRY NO.:** _____ **TOTAL TIME:** _____ **SIGNATURE:** _____		
	GENERAL		
Paragraph 5-13	**1.** Perform a complete 50-hour inspection.		
	DETAIL		
Chapter 63	**1.** Inspect right and left nodal beam assembly as follows: **a.** Flexure assembly for cracks in fiberglass, shear pad debond/delamination, security. F5/F6 **b.** Cam bearing for evidence of grease loss, overheating, and grease seal condition. F5/F6 **c.** Weight and cam arms for indications of misalignment and chafing. F5/F6 **d.** Restraint arms and lift links for security, damage, and elastomeric bearings for obvious damage. F5/F6 **NOTE** Examine inspection window(s) and/or glass(es) for cracking and discoloration. If either of these conditions are present, the part must be removed and replaced prior to returning helicopter for service.		
Chapter 63	**2.** Inspect transmission for evidence of oil leakage and correct oil level. F5/F6		

SCHEDULED INSPECTIONS

5-23. PROGRESSIVE INSPECTION — EVENT 8 (CONT)

DATA REFERENCE	INSPECTION TASK DESCRIPTION	INITIAL MECH	INITIAL OTHER
Chapter 63	**3.** Remove transmission chip detectors. Inspect and clean detectors and test electrical circuits. Install chip detectors. R1		
Chapter 63	**4.** Inspect the left longitudinal isolation mount and support for damage and security. F5		
Chapter 63	**5.** Inspect the right longitudinal isolation mount and support, and the lateral isolation mount and support for damage and security. F6		
Chapter 63	**6.** Inspect rotor brake assembly for evidence of hydraulic leakage, security of attachment, and excessive wear of brake linings. Check brake disc for damage. Check reservoir for fluid level and discoloration. R1/F6		
Chapter 65 BHT-230-CR&O-3	**7.** Inspect tail rotor driveshaft coupling overtemperature indicators (TEMP-PLATES) for evidence of overheating (discoloration) and grease leakage. R1		
Chapter 63	**8.** Inspect main driveshafts overtemperature indicators (TEMP-PLATES) on transmission-end and engine-end driveshaft couplings for evidence of overheating (discoloration) and grease leakage. R1 **NOTE** Examine inspection window(s) and/or glass(es) for cracking and discoloration. If either of these conditions are present, the part must be removed and replaced prior to returning helicopter for service.		
Chapter 12 Chapter 79	**9.** Inspect right and left engine oil tanks and lines for evidence of leakage. Check for proper quantity of oil. F5/F6		
Chapter 63	**10.** Visually inspect the outboard and inboard collective lever idler link attachment points for condition in area of lugs in transmission top case. R1		
BHT-230-CR&O-2	**11.** Inspect hydraulic actuator support attaching nuts for proper torque. R1		

SCHEDULED INSPECTIONS

5-23. PROGRESSIVE INSPECTION — EVENT 8 (CONT)

DATA REFERENCE	INSPECTION TASK DESCRIPTION	INITIAL MECH	INITIAL OTHER
Chapter 62	**12.** Inspect cyclic and collective control levers, swashplate assembly, drive assembly, and links for evidence of damage, security, and corrosion. Inspect walking beam pitch change bearings, ensuring that seals and shields are in place and pitch link clevis is properly aligned with walking beam. If seals and/or shields are missing or loose, bearing must be replaced. R1		
BHT-230-CR&O-2	**13.** Inspect main rotor hub for damage and security, static stops for damage from hard mast contact, and trunnion shims for condition. Inspect yoke for condition in area around flapping bearing attachment bushings. Inspect pendulum dampers for freedom of movement. R1		
BHT-230-CR&O-2	**14.** Visually inspect the accessible portion of the main rotor elastomeric pitch axis bearings, trunnion bearings, and flapping springs for evidence of delamination or loss of elastomer. R1		
Chapter 62	**15.** Inspect main rotor blades for obvious damage and for cleanliness. R1		
Chapter 67 BHT-ALL-SPM	**16.** Inspect roof mounted cyclic and collective shaft assemblies and control tubes for bearing corrosion or mechanical damage, wear, and security of attachment. F5/F6 **NOTE** Examine inspection window(s) and/or glass(es) for cracking and discoloration. If either of these conditions are present, the part must be removed and replaced prior to returning helicopter for service.		
Chapter 29	**17.** Inspect hydraulic lines for leaks, system PC-1 and PC-2 reservoirs for proper level and discoloration of fluid, and module of differential pressure indication. Check for chafe guard deterioration, and verify flexible hoses are in satisfactory condition and exhibit no indications of chafing. F5/F6		

SCHEDULED INSPECTIONS

5-24. PROGRESSIVE INSPECTION — EVENT 9

DATA REFERENCE	INSPECTION TASK DESCRIPTION	INITIAL MECH	INITIAL OTHER
	DATE: _____ **W.O.** _____ **FACILITY:** _____ **HELICOPTER S/N:** _____ **REGISTRY NO.:** _____ **TOTAL TIME:** _____ **SIGNATURE:** _____		
	GENERAL		
Paragraph 5-13	**1.** Perform a complete 50-hour inspection.		
	DETAIL		
Chapter 12 Chapter 67	**1.** Remove left, center, and right bottom panels beneath the crew compartment. Inspect all installed control tubes, links, rod end bearings, bellcranks, supports, and attachment bolts for corrosion, evidence of wear, and security of attachment. Inspect spring cartridges and rotary actuators for security. F1/F2		
Chapter 12	**2.** Remove access panels along bottom centerline of fuselage to FS 356.00.		
Chapter 67	**a.** Inspect directional control tubes, rod end bearings, bellcranks, supports, and attachment bolts for corrosion, evidence of wear, and security of attachments. F3/F4		
	b. Check wiring bundles for security and evidence of chafing. Visually inspect all exposed structure for corrosion, distortion, or cracks. F3/F4		
Chapter 29	**c.** Inspect directional control actuator for leaks and security of attachment, FS 340.00 bulkhead structure for distortion or cracks. F3/F4		
Chapter 67	**3.** Check cyclic stick, collective stick, and tail rotor pedal minimum friction. Adjust if necessary. F2		

SCHEDULED INSPECTIONS

5-24. PROGRESSIVE INSPECTION — EVENT 9 (CONT)

DATA REFERENCE	INSPECTION TASK DESCRIPTION	INITIAL MECH	INITIAL OTHER
Chapter 96	**4.** Remove battery. Inspect vent lines for obstructions or damage, and clean battery mounting area prior to installing a serviceable battery. F1/F2		
Chapter 32	**5.** Inspect nose compartment electrical components for condition and security of mounting, all electrical harnesses and cables for frayed wires, loose or broken clamps and fasteners. Inspect nose door for obvious damage and security of latching. F1/F2		
Chapter 95	**6.** Inspect pitot tube(s) for security of attachment. F1/F2		
Chapter 52	**7.** Inspect crew doors, passenger doors, and baggage compartment doors for corrosion damage, distortion, positive locking mechanisms, seals for tears or separations, and doors for security of attachment. F1/F2, F3/F4		
Chapter 25	**8.** Inspect seat cushions and seat backs for tears, excessive deterioration, and security of attachment. F1/F2, F3/F4		
Chapter 25	**9.** Inspect seat assemblies for security of attachment. Examine crew seats attenuation indicators if applicable. F1/F2, F3/F4		
Chapter 25	**10.** Inspect safety belts and shoulder harnesses for deterioration and security of attachment. F1/F2, F3/F4		
Chapter 26	**11.** Inspect cabin fire extinguisher for security and condition, damage, corrosion, and quick opening clamp for operation and security. F1/F2		
Chapter 11 Chapter 95 BHT-230-FM-1	**12.** Inspect placards and instrument panel decals, and all instrument markings for appearance and legibility. F1/F2		
	CAUTION INGESTION OF BROKEN INLET SCREEN SEGMENTS CAN CAUSE FOREIGN OBJECT DAMAGE TO ENGINE COMPRESSOR SECTION.		
Chapter 71	**13.** Inspect both engine inlet screens for damage. F5/F6		

SCHEDULED INSPECTIONS

5-24. PROGRESSIVE INSPECTION — EVENT 9 (CONT)

DATA REFERENCE	INSPECTION TASK DESCRIPTION	INITIAL MECH	INITIAL OTHER
Chapter 71	**14.** Inspect all firewalls and fireshields for cracks, distortion, loose or missing rivets, broken spot welds, deteriorating seals and sealant. E1/E2		
Chapter 71	**15.** Inspect left power plant area for evidence of fuel and oil leaks, flexible and rigid fuel and oil lines for wear, chafing, damage, and security of attachment. E1		
Chapter 71	**16.** Inspect left engine mounts and accessories for damage and security of attachment. E1		
Chapter 76	**17.** Inspect left engine throttle control housing, push rod, and lever for wear or lost motion and for security of attachment. E1		
Chapter 63	**18.** Inspect left oil cooler blower driveshaft and couplings for condition and security. Check discs for cracks radiating from bolt holes, corrosion, wrinkles, or other evidence of overstress. E1		
Chapter 71 BHT-230-CR&O-V.2	**19.** Inspect left oil cooler blower for obstruction, cleanliness, damage, and security. E1		
Chapter 71	**20.** Inspect right power plant area for evidence of fuel and oil leaks, flexible and rigid fuel and oil lines for wear, chafing, damage, and security of attachment. E2		
Chapter 71	**21.** Inspect right engine mounts and accessories for damage and security of attachment. E2		
Chapter 76	**22.** Inspect right engine throttle control push rod, lever, and bellcrank for lost motion and security of attachment. E2		
Chapter 63	**23.** Inspect right oil cooler blower driveshaft and couplings for condition and security. Check discs for cracks radiating from bolt holes, corrosion, wrinkles, or other evidence of overstress. E2		
Chapter 71 BHT-230-CR&O-V.2	**24.** Inspect right oil cooler blower for obstructions, cleanliness, damage, and security. E2		

SCHEDULED INSPECTIONS

5-24. PROGRESSIVE INSPECTION — EVENT 9 (CONT)

DATA REFERENCE	INSPECTION TASK DESCRIPTION	INITIAL MECH	INITIAL OTHER
Chapter 62 BHT-230-CR&O-2	**25.** For all main rotor hub assemblies, verify torque of main rotor grip(s) retaining bolts/nuts. Apply 100 foot-pounds (135 Nm) of torque to the nut, in the tightening direction. Provided 100 foot-pounds (135 Nm) of torque is reached without movement of the nut, torque the bolt/nut to 125 foot-pounds (169 Nm). If any nut moves before 100 foot-pounds (135 Nm) of torque is reached, remove grip from main rotor hub assembly. Inspect/repair pitch horn and grip assemblies. R1		

SCHEDULED INSPECTIONS

5-25. PROGRESSIVE INSPECTION — EVENT 10

DATA REFERENCE	INSPECTION TASK DESCRIPTION	INITIAL MECH	INITIAL OTHER
	DATE: _____ **W.O.** _____ **FACILITY:** _____ **HELICOPTER S/N:** _____ **REGISTRY NO.:** _____ **TOTAL TIME:** _____ **SIGNATURE:** _____		
	GENERAL		
Paragraph 5-13	**1.** Perform a complete 50-hour inspection.		
	DETAIL		
	NOTE Examine inspection window(s) and/or glass(es) for cracking and discoloration. If either of these conditions are present, the part must be removed and replaced prior to returning helicopter for service.		
Chapter 26	**1.** Inspect right and left engine fire bottles for proper pressure indication. F3/F4		
Chapter 29 Chapter 67	**2.** Remove access panel from bottom of aft fuselage and inspect bellcrank and directional control hydraulic actuator supports for corrosion and mechanical damage. Inspect actuator for hydraulic leakage, bearing wear, and security of attachment. F3/F4		
Chapter 65	**3.** Remove the left aft fairing assembly and inspect the forward tail rotor driveshaft hanger assembly for security of attachment, cracks at mounting ears, and corrosion or mechanical damage. Check bearing for evidence of grease seal leakage and discoloration caused by overheating. E1		

SCHEDULED INSPECTIONS

5-25. PROGRESSIVE INSPECTION — EVENT 10 (CONT)

DATA REFERENCE	INSPECTION TASK DESCRIPTION	INITIAL MECH	INITIAL OTHER
Chapter 65	**4.** Inspect forward tail rotor driveshaft hanger coupling disc assembly for cracks radiating from bolt holes, corrosion, wrinkles, or other evidence of overstress. E1		
Chapter 63 Chapter 79	**5.** Inspect transmission and engine oil coolers for obstructions, security, and evidence of oil leakage. E1/E2		
Chapter 65	**6.** Remove forward and aft tail rotor driveshaft covers and inspect hanger assemblies for security of attachment, cracks at mounting ears, and corrosion or mechanical damage. Check bearings for evidence of grease seal leakage and discoloration caused by overheating. T1/T2		
Chapter 65	**7.** Inspect driveshaft hanger coupling discs and the disc at the tail rotor gearbox input quill for cracks radiating from bolt holes, corrosion, wrinkles, or other evidence of overstress. T1/T2		
Chapter 53	**8.** Visually inspect horizontal stabilizer auxiliary fins for obvious damage and security of attachment. T1/T2		
Chapter 53	**9.** Visually inspect upper and lower surface of stabilizer for indications of cracks immediately adjacent to stabilizer support attaching stabilizer to tailboom. T1/T2		
Chapter 53	**10.** Inspect tail rotor guard and tail skid for obvious damage and security of attachment. T1/T2		
Chapter 53	**11.** Inspect vertical fin assembly for damage. T1/T2		
	CAUTION HARDWARE AND TORQUE REQUIREMENTS OF THE VERTICAL FIN INSTALLATION ARE AFFECTED BY ACCOMPLISHMENT OF TB 230-98-23.		
Chapter 53	**12.** Inspect vertical fin attachment bolts/nuts for proper torque as follows:		

SCHEDULED INSPECTIONS

5-25. PROGRESSIVE INSPECTION — EVENT 10 (CONT)

DATA REFERENCE	INSPECTION TASK DESCRIPTION	INITIAL MECH	INITIAL OTHER
	a. For helicopters prior to TB 230-98-23, torque the nut in the tightening direction while restraining the bolt head. If 90 inch-pounds (10 Nm) of torque is reached without nut movement, increase torque to 110 inch-pounds (12.5 Nm) of torque. If the nut moves below 90 inch-pounds (10 Nm) of torque, proceed with 2-year Inspection. **b.** For helicopters after TB 230-98-23, torque the nut in the tightening direction while restraining the bolt head. If 130 inch-pounds (14.5 Nm) of torque is reached without nut movement, increase torque to 160 inch-pounds (18 Nm) of torque. If the nut moves below 130 inch-pounds (14.5 Nm), proceed with 2-year Inspection. **NOTE** Examine inspection window(s) and/or glass(es) for cracking and discoloration. If either of these conditions are present, the part must be removed and replaced prior to returning helicopter for service.		
Chapter 12 Chapter 65	**13.** Remove tail rotor gearbox fairing and inspect tail rotor gearbox for oil leakage, mechanical or corrosion damage, and security of mounting. Check for proper oil level. T1/T2		
Chapter 65	**14.** Remove tail rotor gearbox chip detector. Inspect and clean detector and test electrical circuit. Install chip detector. R2 **15.** Inspect tail rotor gearbox retaining nuts for proper torque. **16.** Inspect tail rotor pitch control assembly as follows: **a.** Check for excessive radial play between the pitch control assembly and the tail rotor gearbox output shaft due to a worn or debonded guide bearing. Radial play in excess of 0.018 inch (0.5080 mm) is considered excessive. **b.** Check for worn areas on the tail rotor gearbox output shaft wear sleeve. **c.** Check for worn or rough crosshead bearing set. **d.** Check for rough or worn counterweight bellcrank bearings.		

SCHEDULED INSPECTIONS

5-25. PROGRESSIVE INSPECTION — EVENT 10 (CONT)

DATA REFERENCE	INSPECTION TASK DESCRIPTION	INITIAL MECH	INITIAL OTHER
	e. Check for worn inner race in the tail rotor idler assembly.		
	f. Check for unbonded bearing in the upper leg of tail rotor input lever assembly.		
	g. Check for worn bearings in the tail rotor pitch links.		
	NOTE This inspection is applicable to tail rotor hub and blades assembly prior to upgrade per TB 230-06-40 (Part II).		
	17. Inspect tail rotor blades pitch change bearings as follows:		
	a. Without removing the blade, clean exposed areas of pitch change bearings.		
BHT-230-CR&O-3	**b.** With the blade bolts torqued to the highest value of torque range, visually inspect each bearing inner member neck area (full 360°) for cracks. If cracks are found, replace both bearings in blade.		
BHT-230-CR&O-3	**c.** Visually inspect chamfered washers installed in direct contact with the outboard surface of the yoke for deformation. Deformed washers must be replaced.		
Chapter 64	**18.** Inspect tail rotor hub and blades for cleanliness, visible damage to blades, evidence of wear or excessive play in pitch change bearings, and trunnion bearings, and pitch horn for security. R2		
BHT-230-CR&O-3	**19.** Inspect sealant applied at the junction of the tail rotor bearing(s) sleeve(s) and the spar on both sides of the blade for condition. Replace or reapply as required.		
Chapter 64	**20.** Inspect tail rotor hub and blades assembly retaining nut for proper torque. R2		

SCHEDULED INSPECTIONS

5-26. PROGRESSIVE INSPECTION — EVENT 11

DATA REFERENCE	INSPECTION TASK DESCRIPTION	INITIAL MECH	INITIAL OTHER
	DATE: _____ **W.O.** _____ **FACILITY:** _____ **HELICOPTER S/N:** _____ **REGISTRY NO.:** _____ **TOTAL TIME:** _____ **SIGNATURE:** _____		
	GENERAL		
Paragraph 5-13	**1.** Perform a complete 50-hour inspection.		
	DETAIL		
Chapter 67 BHT-ALL-SPM	**1.** Open control tunnel access in the canted bulkhead behind the pilot station. Inspect the lower and upper cyclic and collective pitch control bellcranks for evidence of bearing wear, corrosion or mechanical damage to clevises, and security of attachment to supports and control tube bearings. F5/F6		
Chapter 63	**2.** Inspect right and left nodal beam assembly as follows: **a.** Flexure assembly for cracks in fiberglass, shear pad debond/delamination, and security. F5/F6 **b.** Cam bearing for evidence of grease loss, overheating, and grease seal condition. F5/F6 **c.** Weight and cam arms for indications of misalignment and chafing. F5/F6 **d.** Restraint arms and lift links for security, damage and elastomeric bearings for obvious damage.		

SCHEDULED INSPECTIONS

5-26. PROGRESSIVE INSPECTION — EVENT 11 (CONT)

DATA REFERENCE	INSPECTION TASK DESCRIPTION	INITIAL MECH	INITIAL OTHER
	NOTE Examine inspection window(s) and/or glass(es) for cracking and discoloration. If either of these conditions are present, the part must be removed and replaced prior to returning helicopter for service.		
Chapter 63	**3.** Inspect transmission for evidence of oil leakage and correct oil level. F5/F6		
Chapter 63	**4.** Remove transmission chip detectors. Inspect and clean detectors and test electrical circuits. Install chip detectors. R1		
Chapter 63	**5.** Inspect the left longitudinal isolation mount and support for damage and security. F5		
Chapter 63	**6.** Inspect the right longitudinal isolation mount and support, and the lateral isolation mount and support for damage and security. F6		
Chapter 63	**7.** Inspect rotor brake assembly for evidence of hydraulic leakage, security of attachment, and excessive wear of brake linings. Check brake disc for damage. Check reservoir for fluid level and discoloration. R1/F6		
Chapter 65 BHT-230-CR&O-3	**8.** Inspect tail rotor driveshaft coupling overtemperature indicators (TEMP-PLATES) for evidence of overheating (discoloration) and grease leakage. R1		
Chapter 63	**9.** Inspect main driveshafts overtemperature indicators (TEMP-PLATES) on transmission-end and engine-end driveshaft couplings for evidence of overheating (discoloration) and grease leakage. R1		
	NOTE Examine inspection window(s) and/or glass(es) for cracking and discoloration. If either of these conditions are present, the part must be removed and replaced prior to returning helicopter for service.		
Chapter 12 Chapter 79	**10.** Inspect right and left engine oil tanks and lines for evidence of leakage. Check for proper quantity of oil. F5/F6		

SCHEDULED INSPECTIONS

5-26. PROGRESSIVE INSPECTION — EVENT 11 (CONT)

DATA REFERENCE	INSPECTION TASK DESCRIPTION	INITIAL MECH	INITIAL OTHER
Chapter 63	**11.** Visually inspect the outboard and inboard collective lever idler link attachment points for condition in area of lugs in transmission top case. R1		
BHT-230-CR&O-2	**12.** Inspect hydraulic actuator support attaching nuts for proper torque. R1		
Chapter 62	**13.** Inspect cyclic and collective control levers, swashplate assembly, drive assembly, and links for evidence of damage, security, and corrosion. Inspect walking beam pitch change bearings, ensuring that seals and shields are in place and pitch link clevis is properly aligned with walking beam. If seals and/or shields are missing or loose, bearing must be replaced. R1		
BHT-230-CR&O-2	**14.** Inspect main rotor hub for damage and security, static stops for damage from hard mast contact, and trunnion shims for condition. Inspect yoke for condition in area around flapping bearing attachment bushings. Inspect pendulum dampers for freedom of movement. R1		
BHT-230-CR&O-2	**15.** Visually inspect the accessible portion of the main rotor elastomeric pitch axis bearings, trunnion bearings, and flapping springs for evidence of delamination or loss of elastomer. R1		
Chapter 62	**16.** Inspect main rotor blades for obvious damage and for cleanliness. R1		
Chapter 67 BHT-ALL-SPM	**17.** Inspect roof mounted cyclic and collective shaft assemblies and control tubes for bearing corrosion or mechanical damage, wear, and security of attachment. F5/F6 **NOTE** Examine inspection window(s) and/or glass(es) for cracking and discoloration. If either of these conditions are present, the part must be removed and replaced prior to returning helicopter for service.		
Chapter 29	**18.** Inspect hydraulic lines for leaks, system PC-1 and PC-2 reservoirs for proper level and discoloration of fluid, and module for differential pressure indication. Check for chafe guard deterioration, and verify flexible hoses are in satisfactory condition and exhibit no indications of chafing. F5/F6		

SCHEDULED INSPECTIONS

5-27. PROGRESSIVE INSPECTION — EVENT 12

DATA REFERENCE	INSPECTION TASK DESCRIPTION	INITIAL MECH	INITIAL OTHER
	DATE: _____ **W.O.** _____		
	FACILITY: _____		
	HELICOPTER S/N: _____		
	REGISTRY NO.: _____		
	TOTAL TIME: _____		
	SIGNATURE: _____		
	GENERAL		
Paragraph 5-13	**1.** Perform a complete 50-hour inspection.		
	DETAIL		
Chapter 96	**1.** Remove battery. Inspect vent lines for obstructions or damage, and clean battery mounting area prior to installing a serviceable battery. F1/F2		
Chapter 32	**2.** Inspect nose compartment electrical components for condition and security of mounting, all electrical harnesses and cables for frayed wires, loose or broken clamps and fasteners. Inspect nose door for obvious damage and security of latching. F1/F2		
Chapter 95	**3.** Inspect pitot tube(s) for security of attachment. F1/F2		
Chapter 52	**4.** Inspect crew doors, passenger doors, and baggage compartment doors for corrosion damage, distortion, positive locking mechanisms, seals for tears or separations, and doors for security of attachment. F1/F2, F3/F4		
Chapter 25	**5.** Remove interior trim from around passenger door emergency exit windows and inspect as follows:		
Chapter 52	**a.** Visually inspect window retainer to door frame bond. Replace the retainer if it is not securely bonded to the frame at all points except at the two lower corners. F3/F4		

SCHEDULED INSPECTIONS

5-27. PROGRESSIVE INSPECTION — EVENT 12 (CONT)

DATA REFERENCE	INSPECTION TASK DESCRIPTION	INITIAL MECH	INITIAL OTHER
	b. Visually inspect the inboard side of all rubber retainers. Any nicks or cracks in the retainer is cause for replacement of the retainer. F3/F4		
	c. Check that all filler strips and pull tab are firmly seated in their retainer grooves. F3/F4		
Chapter 25	**d.** Install interior trim. F3/F4		
Chapter 25	**6.** Inspect seat cushions and seat backs for tears, excessive deterioration, and security of attachment. F1/F2, F3/F4		
Chapter 25	**7.** Inspect seat assemblies for security of attachment. Examine crew seats attenuation indicators if applicable. F1/F2, F3/F4		
Chapter 25	**8.** Inspect safety belts and shoulder harnesses for deterioration and security of attachment. F1/F2, F3/F4		
Chapter 26	**9.** Inspect cabin fire extinguisher for security and condition, damage, corrosion, and quick opening clamp for operation and security. F1/F2		
Chapter 11 Chapter 95 BHT-230-FM-1	**10.** Inspect placards and instrument panel decals, and all instrument markings for appearance and legibility. F1/F2		
	11. Inspect first aid kit contents. Replace any items which are damaged or time expired. Replace any items with deteriorated packaging. F2		
	CAUTION INGESTION OF BROKEN INLET SCREEN SEGMENTS CAN CAUSE FOREIGN OBJECT DAMAGE TO ENGINE COMPRESSOR SECTION.		
Chapter 71	**12.** Inspect both engine inlet screens for damage. F5/F6		
Chapter 71	**13.** Inspect all firewalls and fireshields for cracks, distortion, loose or missing rivets, broken spot welds, and deteriorating seals and sealant. E1/E2		

SCHEDULED INSPECTIONS

5-27. PROGRESSIVE INSPECTION — EVENT 12 (CONT)

DATA REFERENCE	INSPECTION TASK DESCRIPTION	INITIAL MECH	INITIAL OTHER
Chapter 71	**14.** Inspect left power plant area for evidence of fuel and oil leaks, flexible and rigid fuel and oil lines for wear, chafing, damage, and security of attachment. E1		
Chapter 71	**15.** Inspect left engine mounts and accessories for damage and security of attachment. E1		
Chapter 76	**16.** Inspect left engine throttle control housing, push rod, and lever for wear or lost motion and for security of attachment. E1		
Chapter 63	**17.** Inspect left oil cooler blower driveshaft and couplings for condition and security. Check discs for cracks radiating from bolt holes, corrosion, wrinkles, or other evidence of overstress. E1		
Chapter 71 BHT-230-CR&O-V.2	**18.** Inspect left oil cooler blower for obstruction, cleanliness, damage, and security. E1		
Chapter 71	**19.** Inspect right power plant area for evidence of fuel and oil leaks, flexible and rigid fuel and oil lines for wear, chafing, damage, and security of attachment. E2		
Chapter 71	**20.** Inspect right engine mounts and accessories for damage and security of attachment. E2		
Chapter 76	**21.** Inspect right engine throttle control push rod, lever, and bellcrank for lost motion and security of attachment. E2		
Chapter 63	**22.** Inspect right oil cooler blower driveshaft and couplings for condition and security. Check discs for cracks radiating from bolt holes, corrosion, wrinkles or other evidence of overstress. E2		
Chapter 71 BHT-230-CR&O-V.2	**23.** Inspect right oil cooler blower for obstruction, cleanliness, damage, and security. E2		

SCHEDULED INSPECTIONS

5-27. PROGRESSIVE INSPECTION — EVENT 12 (CONT)

DATA REFERENCE	INSPECTION TASK DESCRIPTION	INITIAL MECH	INITIAL OTHER
Chapter 62 BHT-230-CR&O-2	**24.** For all main rotor hub assemblies, verify torque of main rotor grip(s) retaining bolts/nuts. Apply 100 foot-pounds (135 Nm) of torque to the nut, in the tightening direction. Provided 100 foot-pounds (135 Nm) of torque is reached without movement of the nut, torque the bolt/nut to 125 foot-pounds (169 Nm). If any nut moves before 100 foot-pounds (135 Nm) of torque is reached, remove grip from main rotor hub assembly. Inspect/repair pitch horn and grip assemblies. R1		

SCHEDULED INSPECTIONS

5-28. EVERY 150 HOURS OF COMPONENT OPERATION

DATA REFERENCE	INSPECTION TASK DESCRIPTION	INITIAL MECH	INITIAL OTHER
	DATE: _____ **W.O.** _____ **FACILITY:** _____ **HELICOPTER S/N:** _____ **REGISTRY NO.:** _____ **TOTAL TIME:** _____ **SIGNATURE:** _____ **SWASHPLATE CONTROLS** **NOTE** This inspection is applicable to drive pins 222-010-455-003 installed in rotating ring assemblies 222-010-403-005 and/or -113.		
Chapter 62	**1.** Disconnect both drive link assemblies from swashplate rotating ring. Inspect trunnion bearing for roughness and/or looseness. Replace bearing(s) if damaged or rough. F5/F6 **2.** Check both swashplate rotating ring drive pins 222-010-455-003 for adequate interference fit as follows: **a.** Clean and inspect drive pin 222-010-455-003 for damage and looseness. Any defect is cause for replacement. **b.** Using a marker, create a straight slip mark on the rotating ring/drive pin joint.		

SCHEDULED INSPECTIONS

5-28. EVERY 150 HOURS OF COMPONENT OPERATION (CONT)

DATA REFERENCE	INSPECTION TASK DESCRIPTION	INITIAL MECH	INITIAL OTHER
	NOTE During the drive pin(s) torque check procedure, deflection of the torque wrench and the offset extension may be noticed when torque is applied. This deflection could be perceived as pin rotation. Therefore, it is important that clear and precise index marks on the pins and the ring exist so that rotation can be verified by visible displacement between the marks. **NOTE** The head of drive pin 222-010-455-003 has two flats that fit into a clearance slot inside the rotating ring. An unacceptable interference fit will allow the pin to rotate within the slot at a torque less than 50 foot-pounds (67.79 Nm). The motion will be small, but can easily be detected using procedures in step e and step f that follow. An acceptable interference fit will allow zero pin rotation during the torque check procedure at 50 foot-pounds (67.79 Nm) of torque. **c.** Align the rectangular hole of torque test tool 230-210-100-101 on the wrenching flats of the drive pin to be tested. Secure the tool to the pin with one thrust washer and nut. Torque the retaining nut 6 to 12 foot-pounds (8.13 to 16.27 Nm). **NOTE** A calibrated dial type torque wrench is recommended for this torque check. However, if a click type wrench is used, apply torque with a slow, smooth motion. Otherwise, the 50 foot-pound (67.79 Nm) torque may be exceeded. **d.** Attach the torque wrench vertically (90° to the centerline of the tool) to the outboard end of the torque test tool.		

SCHEDULED INSPECTIONS

5-28. EVERY 150 HOURS OF COMPONENT OPERATION (CONT)

DATA REFERENCE	INSPECTION TASK DESCRIPTION	INITIAL MECH	INITIAL OTHER
BHT-ALL-SPM	**WARNING** APPLICATION OF TORQUE IN EXCESS OF 50 FOOT-POUNDS (67.79 NM) COULD RESULT IN A BREAKDOWN OF THE PRIMER ADHESION AND SUBSEQUENT PIN ROTATION, WHICH IS CAUSE FOR REMOVAL FROM SERVICE OF THE RING ASSEMBLY. **e.** Apply a maximum torque of 50 foot-pounds (67.79 Nm) in the clockwise/right direction. Verify the slip mark on the rotating ring/drive pin joint. Any misalignment of the slip mark indicating rotation of the drive pin is cause for rejection of the swashplate rotating ring. **f.** Apply a maximum torque of 50 foot-pounds (67.79 Nm) in the counterclockwise/left direction. Verify the slip mark on the rotating ring/drive pin joint. Any misalignment of the slip mark indicating rotation of the drive pin is cause for rejection of the swashplate rotating ring. **g.** If no rotation of the drive pin(s) is observed, inspect the pin(s) for visible damage. Repair any raised material on the wrenching flats of the drive pin(s) and refinish rework areas as required.		

SCHEDULED INSPECTIONS

5-29. EVERY 300 HOURS OF COMPONENT OPERATION

DATA REFERENCE	INSPECTION TASK DESCRIPTION	INITIAL MECH	INITIAL OTHER
	DATE: _____ **W.O.** _____ **FACILITY:** _____ **HELICOPTER S/N:** _____ **REGISTRY NO.:** _____ **TOTAL TIME:** _____ **SIGNATURE:** _____		
	SWASHPLATE CONTROLS		
	1. Clean and inspect collective friction collet. Inspect drive hub assembly for interference, security of attachment, mechanical damage, or corrosion. F5/F6		
Chapter 62	**2.** Check collet friction and adjust as required.		
	3. Remove pitch change links and inspect the following bearings: **a.** Upper pitch link bearing for axial looseness in excess of 0.015 inch (0.38 mm). Replace bearing if limits are exceeded. **b.** Lower pitch link bearing in walking beam for roughness. Check pitch link bearing by misaligning inner race and rotating while applying slight radial force. Replace bearing if roughness is felt when rotating inner race.		
Chapter 62	**4.** Disconnect both drive link assemblies from swashplate rotating ring. Inspect trunnion bearing for roughness and/or looseness. Replace bearing(s) if damaged or rough.		
Chapter 62	**5.** Disconnect both cyclic links, check swashplate friction, and adjust as required.		

SCHEDULED INSPECTIONS

5-29. EVERY 300 HOURS OF COMPONENT OPERATION (CONT)

DATA REFERENCE	INSPECTION TASK DESCRIPTION	INITIAL MECH	INITIAL OTHER
	NOTE This inspection is applicable to drive pins 230-010-402-101 and -103 installed in any rotating ring assembly.		
Chapter 62	**6.** Disconnect both drive link assemblies from swashplate rotating ring. Inspect trunnion bearing for roughness and/or looseness. Replace bearing(s) if damaged or rough. F5/F6		
	7. Check both swashplate rotating ring drive pins 230-010-402-101/-103 for adequate interference fit as follows:		
	a. Clean and inspect drive pin 230-010-402-101/-103 for damage and looseness. Any defect is cause for replacement.		
	b. Using a marker, create a straight slip mark on the rotating ring/drive pin joint.		
	NOTE During the drive pin(s) torque check procedure, deflection of the torque wrench and the offset extension may be noticed when torque is applied. This deflection could be perceived as pin rotation. Therefore, it is important that clear and precise index marks on the pins and the ring exist so that rotation can be verified by visible displacement between the marks.		
	NOTE The head of drive pin 230-010-402-101/-103 has two flats that fit into a clearance slot inside the rotating ring. An unacceptable interference fit will allow the pin to rotate within the slot at a torque less than 50 foot-pounds (67.79 Nm). The motion will be small, but can easily be detected using procedures in step e and step f that follow. An acceptable interference fit will allow zero pin rotation during the torque check procedure at 50 foot-pounds (67.79 Nm) of torque.		

SCHEDULED INSPECTIONS

5-29. EVERY 300 HOURS OF COMPONENT OPERATION (CONT)

DATA REFERENCE	INSPECTION TASK DESCRIPTION	INITIAL MECH	INITIAL OTHER
	c. Align the rectangular hole of torque test tool 230-210-100-101 on the wrenching flats of the drive pin to be tested. Secure the tool to the pin with one thrust washer and nut. Torque the retaining nut 6 to 12 foot-pounds (8.13 to 16.27 Nm). **NOTE** A calibrated dial type torque wrench is recommended for this torque check. However, if a click type wrench is used, apply torque with a slow, smooth motion. Otherwise, the 50 foot-pound (67.79 Nm) torque may be exceeded. **d.** Attach the torque wrench vertically (90° to the centerline of the tool) to the outboard end of the torque test tool. **WARNING** APPLICATION OF TORQUE IN EXCESS OF 50 FOOT-POUNDS (67.79 NM) COULD RESULT IN A BREAKDOWN OF THE PRIMER ADHESION AND SUBSEQUENT PIN ROTATION, WHICH IS CAUSE FOR REMOVAL FROM SERVICE OF THE RING ASSEMBLY. **e.** Apply a maximum torque of 50 foot-pounds (67.79 Nm) in the clockwise/right direction. Verify the slip mark on the rotating ring/drive pin joint. Any misalignment of the slip mark indicating rotation of the drive pin is cause for rejection of the swashplate rotating ring. **f.** Apply a maximum torque of 50 foot-pounds (67.79 Nm) in the counterclockwise/left direction. Verify the slip mark on the rotating ring/drive pin joint. Any misalignment of the slip mark indicating rotation of the drive pin is cause for rejection of the swashplate rotating ring.		

SCHEDULED INSPECTIONS

5-29. EVERY 300 HOURS OF COMPONENT OPERATION (CONT)

DATA REFERENCE	INSPECTION TASK DESCRIPTION	INITIAL MECH	INITIAL OTHER
BHT-ALL-SPM	**g.** If no rotation of the drive pin(s) is observed, inspect the pin(s) for visible damage. Repair any raised material on the wrenching flats of the drive pin(s) and refinish rework areas as required. **8.** Inspect swashplate and lever assembly paying special attention to ball sleeve and slider assemblies as follows: **a.** Tilt the swashplate to one side and subsequently to the opposite side to expose each slider in turn. While viewing each slider, apply a rotational force to the swashplate nonrotating ring in alternating directions. Carefully observe the slider bolt, looking for radial movement. Any evidence of radial movement or fretting residue will require further disassembly of the swashplate for inspection and repair. **b.** Inspect ball sleeve assembly for evidence of debonding or fretting of upper and lower sleeves. Any evidence of looseness or fretting residue will require further disassembly of swashplate for inspection and repair. **c.** Move ball sleeve up and down through full range of travel and inspect swashplate support for surface damage and evidence of radial play between ball sleeve assembly and support. Surface damage and/or evidence of radial play will require further disassembly of swashplate for inspection and repair.		
	ENGINE STARTER GENERATOR		
BHT-230-CR&O-V.2	**NOTE** Inspection intervals may be established per the manufacturer's recommendations, as an alternate means of compliance.		
Chapter 96	**1.** Inspect right engine starter generator brushes for wear down to the diagonal groove wear indicator. E2		
Chapter 96	**2.** Inspect left engine starter generator brushes for wear down to the diagonal groove wear indicator. E1		

SCHEDULED INSPECTIONS

5-30. EVERY 600 HOURS OR 6 MONTHS OF COMPONENT OPERATION

DATA REFERENCE	INSPECTION TASK DESCRIPTION	INITIAL MECH	INITIAL OTHER
	DATE: _____ **W.O.** _____ **FACILITY:** _____ **HELICOPTER S/N:** _____ **REGISTRY NO.:** _____ **TOTAL TIME:** _____ **SIGNATURE:** _____		
	ENGINE FIRE EXTINGUISHER AND CARTRIDGE		
Chapter 26 Chapter 96	**1.** Inspect right engine fire extinguisher for dents and scratches. Perform operational test of engine fire extinguisher system.		
Chapter 26 Chapter 96	**2.** Inspect left engine fire extinguisher for dents and scratches. Perform operational test of engine fire extinguisher system.		

SCHEDULED INSPECTIONS

5-31. EVERY 600 HOURS OR 12 MONTHS OF COMPONENT OPERATION

DATA REFERENCE	INSPECTION TASK DESCRIPTION	INITIAL MECH	INITIAL OTHER
	DATE: _____ W.O. _____		
	FACILITY: _____		
	HELICOPTER S/N: _____		
	REGISTRY NO.: _____		
	TOTAL TIME: _____		
	SIGNATURE: _____		
	MAIN DRIVESHAFT		
Chapter 12 BHT-230-CR&O-2	**1.** Inspect and lubricate right main driveshaft. E2		
Chapter 12 BHT-230-CR&O-2	**2.** Inspect and lubricate left main driveshaft. E1		
	TAIL ROTOR DRIVESHAFT		
Chapter 12 BHT-230-CR&O-3	**1.** Inspect and lubricate tail rotor driveshaft flexible coupling. F5/F6		
	MAIN ROTOR MAST ASSEMBLY		
	NOTE Removal of the main rotor hub assembly and main rotor swashplate assembly is not required to inspect the exposed external surfaces of the mast located above the transmission.		
Chapter 63 BHT-230-CR&O-2	**1.** Inspect the electroless nickel coated area of the mast.		
Chapter 63 BHT-230-CR&O-2	**2.** Inspect the exposed external surfaces of the mast located above the transmission.		

SCHEDULED INSPECTIONS

5-31. EVERY 600 HOURS OR 12 MONTHS OF COMPONENT OPERATION (CONT)

DATA REFERENCE	INSPECTION TASK DESCRIPTION	INITIAL MECH	INITIAL OTHER
	3. Inspect the Teflon liners on the inboard surface of all the fingers of collective friction collet for condition, wear, and debonding.		

SCHEDULED INSPECTIONS

5-32. EVERY 600 HOURS OF COMPONENT OPERATION

DATA REFERENCE	INSPECTION TASK DESCRIPTION	INITIAL MECH	INITIAL OTHER
	DATE: _____ **W.O.** _____ **FACILITY:** _____ **HELICOPTER S/N:** _____ **REGISTRY NO.:** _____ **TOTAL TIME:** _____ **SIGNATURE:** _____		
	TRANSMISSION **NOTE** Whenever outboard collective lever idler link bushings are inspected/measured, the inner floating bushings 222-010-483-001 must also be inspected for damage and wear. New bushing dimensions are: inside diameter: 0.6250 to 0.6255 inch (15.87 to 15.89 mm) and outside diameter: 0.8740 to 0.8745 inch (22.20 to 22.21 mm). **1.** Inspect inner diameter of the two outboard collective lever idler link bushings on the transmission top case 222-040-061 for wear in excess of 0.8774 inch (22.28 mm). Take measurements at two points, 90° apart. If bushing(s) wear exceeds the mentioned limits, replace bushing(s) per TB 230-02-33.		
Chapter 63 BHT-230-CR&O-2	**LIFT LINK** **1.** Remove lift links and inspect rod end bearings elastomerics for separation/delamination and serviceability. F5/F6		
Chapter 79	**EXTERNAL ENGINE OIL FILTER** **1.** Perform left engine external oil filter bypass indicator test. E1		

SCHEDULED INSPECTIONS

5-32. EVERY 600 HOURS OF COMPONENT OPERATION (CONT)

DATA REFERENCE	INSPECTION TASK DESCRIPTION	INITIAL MECH	INITIAL OTHER
Chapter 79	**2.** Perform right engine external oil filter bypass indicator test. E2		

SCHEDULED INSPECTIONS

5-33. EVERY 1200 HOURS OF COMPONENT OPERATION

DATA REFERENCE	INSPECTION TASK DESCRIPTION	INITIAL MECH	INITIAL OTHER
	DATE: _____ **W.O.** _____		
	FACILITY: _____		
	HELICOPTER S/N: _____		
	REGISTRY NO.: _____		
	TOTAL TIME: _____		
	SIGNATURE: _____		
	HYDRAULIC PUMP SPLINES		
Chapter 29	**1.** Remove left hydraulic pump. Inspect pump drive spline and transmission adapter gear spline for wear. F5		
Chapter 29	**2.** Remove right hydraulic pump. Inspect pump drive spline and transmission adapter gear spline for wear. F6		

SCHEDULED INSPECTIONS

5-34. EVERY 2500 HOURS OF COMPONENT OPERATION

DATA REFERENCE	INSPECTION TASK DESCRIPTION	INITIAL MECH	INITIAL OTHER
	DATE: _____ **W.O.** _____ **FACILITY:** _____ **HELICOPTER S/N:** _____ **REGISTRY NO.:** _____ **TOTAL TIME:** _____ **SIGNATURE:** _____		
	MAIN ROTOR HUB **NOTE** This inspection is applicable to all main rotor hub assemblies 222-012-101.		
Chapter 62	**1.** Remove main rotor hub and blades.		
BHT-230-CR&O-2	**2.** Disassemble and clean main rotor hub.		
	NOTE It is not necessary to remove the flapping bearings from the trunnion to accomplish this inspection.		
BHT-ALL-SPM	**3.** Perform a fluorescent penetrant inspection of the following parts: **a.** Grip assembly **b.** Pitch horn assembly		

SCHEDULED INSPECTIONS

5-34. EVERY 2500 HOURS OF COMPONENT OPERATION (CONT)

DATA REFERENCE	INSPECTION TASK DESCRIPTION	INITIAL MECH	INITIAL OTHER
BHT-ALL-SPM	**4.** Perform magnetic particle inspection on the following parts: **NOTE** Some of the bolts used in these applications are manufactured from non-magnetic material. For those bolts, fluorescent penetrant inspection method (BHT-ALL-SPM is acceptable in leu of magnetic particle inspection requirement. **a.** Pitch horn to grip attachments bolts **NOTE** Some of the bolts used in these applications are manufactured from non-magnetic material. For those bolts, fluorescent penetrant inspection method (BHT-ALL-SPM is acceptable in leu of magnetic particle inspection requirement. **b.** Flapping bearing to yoke attachment bolts		
BHT-230-CR&O-2	**5.** Install new buffers on the pitch horn assemblies and flapping bearing assemblies.		
BHT-230-CR&O-2	**6.** Reassemble main rotor hub.		
Chapter 62	**7.** Install main rotor hub and blades.		

SCHEDULED INSPECTIONS

5-35. AT 2500 HOURS AND EVERY 1200 HOURS THEREAFTER

DATA REFERENCE	INSPECTION TASK DESCRIPTION	INITIAL MECH	INITIAL OTHER
	DATE: _____ **W.O.** _____ **FACILITY:** _____ **HELICOPTER S/N:** _____ **REGISTRY NO.:** _____ **TOTAL TIME:** _____ **SIGNATURE:** _____		
Chapter 6	**MAIN BEAM/ROOF FRAME JOINT** **1.** Remove cover at FS 240. BL 12 on the right interior roof skin and inspect outboard side of main beam 222-031-583-104 bulkhead joint and attaching flange of roof frame 222-031-503-107 for cracks. If crack(s) is found, contact Bell Helicopter Textron Customer Service Representative. F4 **2.** At station 233, inspect front and aft portion of roof frame 222-031-503, from BL 0.0 to right side attachment flange with the main beam 222-031-583 for cracks. Pay particular attention to the area in line with the inboard leg of star doubler and around fasteners retaining Frahm support. If crack(s) is found, contact Bell Helicopter Textron Customer Representative.		

SCHEDULED INSPECTIONS

5-36. EVERY 6 MONTHS

DATA REFERENCE	INSPECTION TASK DESCRIPTION	INITIAL MECH	INITIAL OTHER
	DATE: _____ W.O. _____ FACILITY: _____ HELICOPTER S/N: _____ REGISTRY NO.: _____ TOTAL TIME: _____ SIGNATURE: _____		
	STANDBY ATTITUDE INDICATOR		
Chapter 95	**1.** Test the pilot standby attitude indicator power supply.		

SCHEDULED INSPECTIONS

5-37. EVERY 2 CALENDAR YEARS

DATA REFERENCE	INSPECTION TASK DESCRIPTION	INITIAL MECH	INITIAL OTHER
	DATE: _____ **W.O.** _____ **FACILITY:** _____ **HELICOPTER S/N:** _____ **REGISTRY NO.:** _____ **TOTAL TIME:** _____ **SIGNATURE:** _____		
Chapter 95	**PITOT STATIC SYSTEM** **1.** Drain any accumulated moisture from the pitot-static system piping. F1/F2		
Chapter 62 BHT-ALL-SPM	**FLIGHT CONTROLS** **1.** Inspect flight control bolts. R1 **NOTE** More frequent inspection of control bolts may be required when operating in adverse environmental conditions. **a.** Remove the following bolts: • Main rotor pitch link universal bearing lower (2) • Main rotor pitch link lower (2) • Main Rotor pitch link universal bearing upper (2) • Collective lever to servo (1) • Cyclic lever to servo (2) • Swashplate horn to cyclic links (2)		

SCHEDULED INSPECTIONS

5-37. EVERY 2 CALENDAR YEARS (CONT)

DATA REFERENCE	INSPECTION TASK DESCRIPTION	INITIAL MECH	INITIAL OTHER
	• Walking beam to drive hub (2) • Walking beam to drive link (2) • Idler link to transmission top case (2) • Collective levers to idler link (2) • Cyclic link to cyclic lever (2) **b.** Clean bolts with cloth damp with MEK (C-309). **c.** Visually inspect bolts for thread damage, shank wear, and corrosion. Replace bolts that show evidence of damaged threads, shank wear, or corrosion pitting.		
Chapter 62 BHT-ALL-SPM	**d.** Apply corrosion preventive compound (C-104) to shanks of bolts only and install. **e.** After bolts are installed, torqued, and lockwired, coat bolt heads and nuts with corrosion preventive compound (C-101).		
Chapter 53 BHT-ALL-SPM	**VERTICAL FIN** **1.** Remove vertical fin. Discard nuts. **2.** Inspect the vertical fin and tailboom fittings for cracks, elongation of bolt holes, distortion, and corrosion. **3.** Inspect attaching bolts for serviceability. **4.** Temporarily install vertical fin to tailboom using serviceable hardware. Tighten hardware 5 inch-pounds (0.5 Nm) plus tare. Using feeler gauge, measure gap at eight locations where vertical fin fitting contacts tailboom fitting. Gap shall be less than 0.003 inch (0.076 mm). If gap is larger than 0.003 inch (0.076 mm), fill gap using shim 120-008C40E11. Maximum allowable shim thickness to be 0.010 inch (0.254 mm). Remove vertical fin.		

SCHEDULED INSPECTIONS

5-37. EVERY 2 CALENDAR YEARS (CONT)

DATA REFERENCE	INSPECTION TASK DESCRIPTION	INITIAL MECH	INITIAL OTHER
	CAUTION ATTACHING HARDWARE SHALL BE TORQUED TO SPECIFIED TORQUE WITHIN 60 MINUTES AFTER APPLICATION OF SEALANT. **5.** Apply sealant (C-308) to faying surface of vertical fin fitting and tailboom fitting. Install shim (if required). **6.** Apply corrosion preventive compound (C-104) to shank only of all attaching bolts. **CAUTION** HARDWARE AND TORQUE REQUIREMENTS OF THE VERTICAL FIN INSTALLATION ARE AFFECTED BY ACCOMPLISHMENT OF TB 230-98-23.		
Chapter 53 BHT-ALL-SPM	**7.** Install vertical fin to tailboom using bolts, washers, and nuts. Torque attaching bolts/nuts as required. **8.** Coat all bolt heads, nuts, and washers with corrosion preventive compound (C-101).		

SCHEDULED INSPECTIONS

5-38. EVERY 3 CALENDAR YEARS

DATA REFERENCE	INSPECTION TASK DESCRIPTION	INITIAL MECH	INITIAL OTHER
	DATE: _____ **W.O.** _____		
	FACILITY: _____		
	HELICOPTER S/N: _____		
	REGISTRY NO.: _____		
	TOTAL TIME: _____		
	SIGNATURE: _____		
	HYDRAULIC SYSTEM RESERVOIR		
Chapter 29	**1.** Replace hydraulic system PC-1 reservoir baffle. F6		
Chapter 29	**2.** Replace hydraulic system PC-2 reservoir baffle. F5		
	EMERGENCY FLOTATION SYSTEM		
	NOTE This inspection applies to any reservoir/cylinder that has been manufactured or last retested prior to July 1, 2006.		
Chapter 99	**1.** Remove emergency flotation system nitrogen reservoir. Perform a hydrostatic test in accordance with DOT-SP-8162 cylinder inspection.		

SCHEDULED INSPECTIONS

5-39. EVERY 5 CALENDAR YEARS

DATA REFERENCE	INSPECTION TASK DESCRIPTION	INITIAL MECH	INITIAL OTHER
	DATE: _____ **W.O.** _____ **FACILITY:** _____ **HELICOPTER S/N:** _____ **REGISTRY NO.:** _____ **TOTAL TIME:** _____ **SIGNATURE:** _____		
	FIRE EXTINGUISHER RESERVOIR		
Chapter 4	**NOTE** Refer to Airworthiness Limitations for squib replacement intervals.		
Chapter 26	**1.** Remove the right fire extinguisher reservoir. Do a hydrostatic test in accordance with specification DOT-4 DA, DOT-4 DS, or DOT-SP-7945 as marked on container. F4		
Chapter 26	**2.** Remove the left fire extinguisher reservoir. Do a hydrostatic test in accordance with specification DOT-4 DA, DOT-4 DS, or DOT-SP-7945 as marked on container. F3		
	EMERGENCY FLOTATION SYSTEM		
	NOTE This inspection applies to any reservoir/cylinder that has been manufactured or last retested after July 1, 2006.		
Chapter 99	**1.** Remove emergency flotation system nitrogen reservoir. Perform a hydrostatic test in accordance with DOT-SP-8162 cylinder inspection.		

SCHEDULED INSPECTIONS

5-40. EVERY 10 CALENDAR YEARS

DATA REFERENCE	INSPECTION TASK DESCRIPTION	INITIAL MECH	INITIAL OTHER
	DATE: _____ **W.O.** _____ **FACILITY:** _____ **HELICOPTER S/N:** _____ **REGISTRY NO.:** _____ **TOTAL TIME:** _____ **SIGNATURE:** _____ **MAIN ROTOR MAST ASSEMBLY (TORQUEMETER)** **NOTE** This inspection is only applicable for mast assemblies P/N 222-040-130-1, 222-040-130-101, 222-040-130-107 and 222-040-130-109. For mast assemblies P/N 222-040-130-113 and subsequent, this inspection does not need to be done.		
BHT-230-CR&O-2	**1.** Mast assembly must be disassembled and inspected for corrosion, both externally and internally, in addition to the inspection criteria of the BHT-230-CR&O-2. The torquemeter shaft must be removed to inspect the inside diameter. The mast assembly must be returned to Bell Helicopter Textron for reindexing of the mast torque sensing components. R1		

SPECIAL INSPECTIONS

5-41. SPECIAL INSPECTIONS

Special inspections are a one-time inspection that must be performed at specified times following certain maintenance actions.

The parts affected include the following:

- Main Rotor Hub (after every main rotor hub disassembly)
- Main Rotor Trunnion (after the first flight following each installation)
- Tail Rotor Hub Retention Nut (after 1 to 5 hours of operation following each installation)
- Main Rotor Mast Nut (after 5 to 10 hours of operation following each installation)
- Vertical Fin (after 5 to 10 hours of operation following each installation)
- Main Rotor Hub (after 5 to 10 hours of operation following each installation)
- Hydraulic Actuator Support (after 5 to 10 hours of operation following each installation)
- Tail Rotor Hub and Blades (after 5 to 10 hours of operation following each installation)
- Swashplate (after 25 hours of operation following each installation)
- Main Rotor Trunnion (after 25 hours of operation following each installation)
- Tail Rotor Gearbox (after 100 hours of operation following each installation)

SPECIAL INSPECTIONS

5-42. AFTER EVERY MAIN ROTOR HUB DISASSEMBLY

DATA REFERENCE	INSPECTION TASK DESCRIPTION	INITIAL MECH	INITIAL OTHER
	DATE: _____ **W.O.** _____ **FACILITY:** _____ **HELICOPTER S/N:** _____ **REGISTRY NO.:** _____ **TOTAL TIME:** _____ **SIGNATURE:** _____ **MAIN ROTOR HUB** **NOTE** This inspection is to be performed every time the main rotor hub is disassembled to the extent allowing inspection of the buffers installed on the pitch horns and the flapping bearings.		
BHT-230-CR&O-2	**1.** When the main rotor hub is disassembled, inspect condition of the buffers on the pitch horns, flapping bearings, and the yoke assembly. No defect allowed. Install new buffers as required. R1		

SPECIAL INSPECTIONS

5-43. AFTER FIRST FLIGHT FOLLOWING EACH INSTALLATION

DATA REFERENCE	INSPECTION TASK DESCRIPTION	INITIAL MECH	INITIAL OTHER
	DATE: _____ **W.O.** _____ **FACILITY:** _____ **HELICOPTER S/N:** _____ **REGISTRY NO.:** _____ **TOTAL TIME:** _____ **SIGNATURE:** _____		
BHT-230-CR&O-2	**MAIN ROTOR TRUNNION** **1.** Verify torque of main rotor trunnion bolts in the tightening direction, minimum 45 foot-pounds (61 Nm). Provided 45 foot-pounds (61 Nm) is reached without movement of bolts, torque bolts to 53 foot-pounds (72 Nm). If any bolt moves before 45 foot-pounds (61 Nm) is reached, remove all six bolts and visually inspect for crack(s) or sign(s) of yielding. If any defective bolts are found, replace all six bolts. If no defects are found, reinstall bolts. R1		

SPECIAL INSPECTIONS

5-44. AFTER 1 TO 5 HOURS OF OPERATION FOLLOWING EACH INSTALLATION

DATA REFERENCE	INSPECTION TASK DESCRIPTION	INITIAL MECH	INITIAL OTHER
	DATE: _____ **W.O.** _____ **FACILITY:** _____ **HELICOPTER S/N:** _____ **REGISTRY NO.:** _____ **TOTAL TIME:** _____ **SIGNATURE:** _____		
Chapter 65	**TAIL ROTOR HUB RETENTION NUT** **1.** Following each installation, verify torque of retention nut attaching the tail rotor hub assembly to the tail rotor gearbox output shaft. Repeat the torque verification every 1 to 5 hours until torque stabilizes to 40 to 50 foot-pounds (54 to 68 Nm). R2		

SPECIAL INSPECTIONS

5-45. AFTER 5 TO 10 HOURS OF OPERATION FOLLOWING EACH INSTALLATION

DATA REFERENCE	INSPECTION TASK DESCRIPTION	INITIAL MECH	INITIAL OTHER
	DATE: _____ **W.O.** _____ **FACILITY:** _____ **HELICOPTER S/N:** _____ **REGISTRY NO.:** _____ **TOTAL TIME:** _____ **SIGNATURE:** _____		
	MAIN ROTOR MAST NUT		
Chapter 62	**1.** Following each installation, verify torque of nut to 475 to 675 foot-pounds (644 to 915 Nm) after a minimum of 5 hours, but not to exceed 10 hours of service. R1		
Chapter 53	**VERTICAL FIN** **CAUTION** HARDWARE AND TORQUE REQUIREMENTS OF THE VERTICAL FIN INSTALLATION ARE AFFECTED BY ACCOMPLISHMENT OF TB 230-98-84. **1.** Following each installation, make sure the torque of the retention bolts/nuts is correct after a minimum of 5 hours, but not to exceed 10 hours of service. Apply the highest value of specified torque range to the nut while restraining the bolt head.		
	MAIN ROTOR HUB		
BHT-230-CR&O-2	**1.** Following each installation, verify torque of main rotor grip(s) retaining bolt/nuts to 125 foot-pounds (169 Nm) after a minimum of 5 hours, but not to exceed 10 hours of service.		

SPECIAL INSPECTIONS

5-45. AFTER 5 TO 10 HOURS OF OPERATION FOLLOWING EACH INSTALLATION (CONT)

DATA REFERENCE	INSPECTION TASK DESCRIPTION	INITIAL MECH	INITIAL OTHER
BHT-230-CR&O-2	**2.** Following each installation, verify torque of main rotor flapping bearing(s) retaining bolts/nuts to 125 foot-pounds (169 Nm) after a minimum of 5 hours, but not to exceed 10 hours of service.		
	TAIL ROTOR HUB AND BLADES		
BHT-230-CR&O-3	**1.** Inspect tail rotor blade attaching bolts/nuts for correct torque after a minimum of 5 hours, but not to exceed 10 hours of operation after each installation. Apply highest value of specified torque range to the nut while restraining the bolt head. Repeat the torque verification every 1 to 5 hours until torque stabilizes. R2		
	HYDRAULIC ACTUATOR SUPPORT		
BHT-230-CR&O-2	**1.** Following each installation, verify torque of hydraulic actuator support attaching nuts for correct torque after a minimum of 5 hours, but not to exceed 10 hours of service.		

SPECIAL INSPECTIONS

5-46. AFTER 25 HOURS OF OPERATION FOLLOWING EACH INSTALLATION

DATA REFERENCE	INSPECTION TASK DESCRIPTION	INITIAL MECH	INITIAL OTHER
	DATE: _____ **W.O.** _____ **FACILITY:** _____ **HELICOPTER S/N:** _____ **REGISTRY NO.:** _____ **TOTAL TIME:** _____ **SIGNATURE:** _____		
	SWASHPLATE		
Chapter 62	**1.** Verify swashplate friction adjustment 25 hours after initial installation. R1		
	MAIN ROTOR TRUNNION		
	NOTE Retorque is not required if flapping springs 222-310-117-105 are installed.		
BHT-230-CR&O-2	**1.** Verify torque of main rotor trunnion bolts in the tightening direction, minimum 45 foot-pounds (61 Nm). Provided 45 foot-pounds (61 Nm) is reached without movement of bolts, torque bolts to 53 foot-pounds (72 Nm). If any bolt moves before 45 foot-pounds (61 Nm) is reached, remove all six bolts and visually inspect for cracks or signs of yielding. If any defective bolts are found, replace all six bolts. If no defect(s) are found, reinstall bolts. R1		

SPECIAL INSPECTIONS

5-47. AFTER 100 HOURS OF OPERATION FOLLOWING EACH INSTALLATION

DATA REFERENCE	INSPECTION TASK DESCRIPTION	INITIAL MECH	INITIAL OTHER
	DATE: _____ W.O. _____ FACILITY: _____ HELICOPTER S/N: _____ REGISTRY NO.: _____ TOTAL TIME: _____ SIGNATURE: _____		
	TAIL ROTOR GEARBOX		
Chapter 65	**1.** Verify torque of tail rotor gearbox retaining nuts. T1/T2		

CONDITIONAL INSPECTIONS

5-48. CONDITIONAL INSPECTIONS

Conditional inspections are unscheduled inspections or checks that must be performed following the occurrence of unusual events reported during the operation of the helicopter. Such events include (but are not limited to) the following:

- Hard Landing
- Sudden Stoppage — Power ON or OFF
- Overtorque
- Lightning Strike
- Overspeed
- Compressor Stall or Surge

Components removed from a helicopter for evaluation as a result of conditional inspection shall be evaluated as an interrelated group. Removal records accompanying each component shall cross-reference part and serial numbers of other components removed for evaluation.

CONDITIONAL INSPECTIONS

5-49. HARD LANDING

DATA REFERENCE	INSPECTION TASK DESCRIPTION	INITIAL MECH	INITIAL OTHER
	DATE: _____ **W.O.** _____ **FACILITY:** _____ **HELICOPTER S/N:** _____ **REGISTRY NO.:** _____ **TOTAL TIME:** _____ **SIGNATURE:** _____ A hard landing is defined as any incident or accident in which the impact of the helicopter with the ground causes severe pitching of the main rotor, allowing hard contact of hub with mast, which results in cracking or yielding of the transmission or nodal beam support structure, or imparts unusually high loads on the landing gear. A hard landing relative to retractable landing gear is any landing that causes any of the tires and/or shock struts to bottom out (when properly serviced) or induces high side loads on any of the landing gear. The following condition at touchdown could result in such a landing: • Excessive rate of descent • Excessive sideward speed • High roll angle coupled with normal rates of descent • High yaw angles coupled with normal forward landing speeds • Landing with forward airspeed in soft or unprepared soil Following hard landing, accomplish the following: **1.** Inspect main and tail rotor blades for evidence of strike damage. If such evidence is found on either rotor, perform Sudden Stoppage — Power ON or OFF.		

CONDITIONAL INSPECTIONS

5-49. HARD LANDING (CONT)

DATA REFERENCE	INSPECTION TASK DESCRIPTION	INITIAL MECH	INITIAL OTHER
	2. Visually inspect underside of fuselage and tailboom for evidence of ground contact. **3.** If, under the conditions listed, the retractable landing gear is judged to have been involved in a hard landing, place the helicopter on jacks and perform the following inspections: **a.** Visually inspect tires for cuts, damage, and deflation. **b.** Inspect wheel rims for cracks or deformation. Check wheel rim connecting bolts for torque and damage. Inspect brake assemblies for cracks or damage to housing or mounting bolts. **NOTE** If wheel is deformed or cracked, replace wheel and remove landing gear assembly for disassembly and inspection. **c.** Inspect wheel yokes for yielding and twist (removal of yoke from landing gear is required). Fluorescent penetrant inspect yoke for cracks. Check holes for elongation. **NOTE** If the landing gear airframe attachment fittings show indications of damage, remove lower wing access covers as necessary and inspect all wing attachment fittings and bolts for cracks or deformation. Remove under fuselage access panels and inspect main beams for damage. **d.** Inspect main and nose gear drag arm and landing gear housing for deformation and for damage at airframe attachment points. Check airframe attachment fittings for cracks and damaged rivets. **NOTE** If during removal of air or shock strut cycling, hydraulic fluid is expelled from air valve, remove landing gear for further inspection.		

CONDITIONAL INSPECTIONS

5-49. HARD LANDING (CONT)

DATA REFERENCE	INSPECTION TASK DESCRIPTION	INITIAL MECH	INITIAL OTHER
	e. Remove air from shock strut. Leave air valve open and cycle shock struts by manually raising and lowering wheel from fully extended to fully compressed position. Check shock strut for binding. If binding occurs, remove landing gear for disassembly and inspection. **f.** Manually raise landing gears to retracted position and check for deformation, looseness, and clearance within wheel well.		
Chapter 32	**4.** Perform landing gear deflection check. **a.** If crosstubes have yielded, remove landing gear and inspect support and structure to which they are attached for signs of yielding or other damage. Remove access panels under fuselage and inspect main beams for damage. **b.** If supports and attaching structure are not damaged, replace damaged landing gear components. **5.** Inspect mast for evidence of hard rotor hub contact, sufficient to yield or deform the mast. **6.** If no damage other than yielded landing gear crosstubes has been found at this point, it can reasonably be decided that a true hard landing did not occur. Complete a daily inspection and return helicopter to flight status provided no further evidence of damage is found. **7.** If damage is more extensive than landing gear crosstube yielding, or if a hard landing has occurred, comply with step 8 through step 23. **8.** Inspect main and tail rotor blades for evidence of strike damage. If no obvious damage is discovered, the blades may be retained in service for continued usage. However, if either rotor comes into contact with the ground, tailboom or other foreign object, the blades are to be regarded as having been involved in a sudden stoppage and must be returned to a blade repair station for inspection. **9.** Visually inspect underside of fuselage and tailboom for evidence of ground contact.		

CONDITIONAL INSPECTIONS

5-49. HARD LANDING (CONT)

DATA REFERENCE	INSPECTION TASK DESCRIPTION	INITIAL MECH	INITIAL OTHER
BHT-230-CR&O-2	**10.** For transmission and mast inspection, proceed as follows: **a.** Inspect mast for evidence of hard rotor hub contact, sufficient to yield or deform mast. **NOTE** If there is any yielding or deformation in areas contacted by main rotor hub, or any other obvious damage, the mast is unserviceable and nonrepairable, and transmission top case must be inspected for yielding. **b.** Inspect transmission mounting points for cracks, loose, sheared, or elongated rivets, studs, or bolts, distortion or deformation, paying particular attention to the following areas: **(1)** Restraints and restraint fittings **(2)** Transmission top case and lift link attachment fittings **(3)** Transmission outboard quill case and forward lift links **(4)** Transmission redundant pylon up-stop plates and up-stop pins **(5)** Nodal beam travel (up and down) stops and flexure fittings **(6)** Main driveshaft transmission-end coupling grease retainer sleeves and adjoining shaft area **11.** For main rotor hub inspection, proceed as follows: **a.** The main rotor flexure may be inspected in the following manner without removing the hub from the helicopter: **(1)** Untie the main rotor so that the blades are free to flap. **(2)** Place a 6-inch (15-cm) (or equivalent) straight edge across the bottom surface of the flexure.		

CONDITIONAL INSPECTIONS

5-49. HARD LANDING (CONT)

DATA REFERENCE	INSPECTION TASK DESCRIPTION	INITIAL MECH	INITIAL OTHER
	(3) Measure the resulting gap between bottom of the flexure and the midpoint of the straight edge with a feeler gauge on both flexures. If the difference between the two measurements is unequal in excess of 0.003 inch (0.076 mm), or in excess of 0.030 inch (0.762 mm) on either flexure, the hub should be removed and returned to an overhaul facility for evaluation. **(4)** If requirements of preceding steps are not exceeded, the hub may be reused. **b.** Inspect the static stops for yielding. **NOTE** The following procedure should be used to determine the distance from concave surface of yoke to concave surface of static stop. If distance is less than 0.025 inch (0.635 mm), static stop has yielded excessively and must be replaced. Modeling clay, wax, or any other material that will give a suitable impression may be used. **(1)** Press small amount of modeling clay against yoke to static stop intersection to form an impression in clay. **(2)** Carefully remove clay and inspect offset with a 0.025-inch (0.635-mm) gauge. **(3)** If offset is less than 0.025 inch (0.635 mm), static stop must be replaced. **(4)** Repeat procedure to inspect static stop on opposite side of yoke.		
BHT-230-CR&O-2	**12.** If any damage is found after completing the inspections of step 8, step 10, and step 11, remove and perform an overhaul inspection of following components: **a.** Mast assembly **b.** Transmission assembly **c.** Main driveshaft assemblies		

CONDITIONAL INSPECTIONS

5-49. HARD LANDING (CONT)

DATA REFERENCE	INSPECTION TASK DESCRIPTION	INITIAL MECH	INITIAL OTHER
	13. Check all cowling, fairing, windows, and doors for proper fit and alignment. Misalignment may indicate a distorted fuselage, resulting in major stresses and damage to components.		
	14. Inspect cabin roof structure in the nodal beam area for loose, missing, or sheared rivets, and distortion or damage to roof panels or supporting beam structure. Check for crack(s) and loose Hi-Locks in fitting connection areas. Particular attention should be directed to the nodal beam attachment fittings and pylon up-stop fittings.		
	15. Remove lower wing access covers and inspect all wing attachment fittings and connecting hardware for crack(s) or deformation.		
	16. Inspect tailboom internally and externally for crack(s), distortion, and loose rivets, especially in the tailboom aft fuselage splice area and at the tail rotor gearbox attachment fitting.		
	17. Inspect vertical fin for damage and distortion, paying particular attention to the tail skid, tail rotor guard, their mounting structure, and the vertical fin attachment fitting.		
	NOTE If significant damage has been found in any area of the airframe, inspection shall be expanded in those areas until it extends beyond the zone of damage.		
Rolls-Royce 250-C30 Series Operation and Maintenance Manual, 14W2	**18.** Perform engine Excessive-G Inspection.		
	19. Perform complete visual inspection of the flight control system from cockpit to main rotor head for bent or damaged tubes, damaged actuator structure, bellcranks and supports, and for damaged bearings. Particular attention should be given to all rotating and nonrotating controls mounted above the transmission.		

CONDITIONAL INSPECTIONS

5-49. HARD LANDING (CONT)

DATA REFERENCE	INSPECTION TASK DESCRIPTION	INITIAL MECH	INITIAL OTHER
	20. Check for leaks in the hydraulic system, interference or binding of hydraulic actuators and controls, and for satisfactory operation. **21.** Inspect fuel and oil systems for damage and leaks. **22.** Inspect fuel system breakaway valves (vent and wing/ fuselage disconnects). **a.** Actuation of the vent line will be readily noticeable as separation of the two halves is required before the valve halves seal. **b.** Actuation of the interconnect valve will be detectable by observing a yellow ring adjacent to the frangible section. If the ring is visible, the valve has actuated and requires replacement. **23.** Perform a thorough visual inspection of the following components. If inspection does not reveal any discrepancies or obvious damage to components, they may be retained in service. **a.** Tail rotor hub and controls **b.** Tail rotor gearbox **c.** Tail rotor driveshafts **d.** Tail rotor driveshaft hanger assemblies **e.** Main rotor blades **f.** Tail rotor blades		

CONDITIONAL INSPECTIONS

5-50. SUDDEN STOPPAGE — POWER ON OR OFF

DATA REFERENCE	INSPECTION TASK DESCRIPTION	INITIAL MECH	INITIAL OTHER
	DATE: _____ **W.O.** _____ **FACILITY:** _____ **HELICOPTER S/N:** _____ **REGISTRY NO.:** _____ **TOTAL TIME:** _____ **SIGNATURE:** _____ Sudden stoppage is defined as any rapid deceleration of the drive system whether caused by seizure within the helicopter transmission or by contact of the main or tail rotor blades with the ground, water, snow, dense vegetation, or other object of sufficient mass to cause deceleration. Tail rotor blade damage, when caused by striking some object sufficient to require blade replacement, is considered sudden stoppage. When sudden stoppage occurs, inspect helicopter and replace components as follows: **NOTE** If sudden stoppage is the result of main rotor strike, comply with step 1. If sudden stoppage is the result of tail rotor strike, comply with step 2. **1.** Perform a sudden stoppage inspection as follows: **a.** Main Rotor Blades **(1)** Visually inspect both main rotor blades for evidence of damage such as cracks, bonding voids, and wrinkled skin. **(2)** If either blade is damaged, return both blades to an authorized overhaul facility. Make an entry in component record to show reason for removal was sudden stoppage. **(3)** If no evidence of damage is found on either blade, both blades may be retained in service.		

CONDITIONAL INSPECTIONS

5-50. SUDDEN STOPPAGE — POWER ON OR OFF (CONT)

DATA REFERENCE	INSPECTION TASK DESCRIPTION	INITIAL MECH	INITIAL OTHER
BHT-230-CR&O-2	**b.** Main Rotor Hub **(1)** If main rotor blades were not damaged, the main rotor hub may be retained in service.		
BHT-230-CR&O-2	**(2)** If main rotor blades incurred damage, perform an overhaul evaluation inspection on main rotor hub assembly. Make an entry in component record to show reason for removal was sudden stoppage.		
	c. Main Rotor Controls		
BHT-230-CR&O-2	**(1)** If one or more of the following discrepancies in step (a) through step (d) are found, the swashplate and levers assembly, and the drive assembly shall be removed and an overhaul inspection shall be performed.		
	(a) Main rotor blade damage requiring overhaul or replacement		
	(b) Obvious damage or deformation to pitch horn or connecting bolts		
	(c) Pitch change link failure of any type		
	(d) Damage to lift link (upper or lower) attachment fittings, transmission up-stops or nodal beam travel stops		
	(2) If no condition exists as listed in step c, substep (1); perform a close visual inspection and if no evidence of damage is found, the swashplate and levers assembly and the drive assembly may be retained in service.		
	(3) Replace all bolts in rotating controls. Scrap removed bolts.		
BHT-230-CR&O-2	**d.** Main Driveshafts **(1)** Remove and inspect main driveshafts visually. If evidence of yielding or deformation is noted, scrap the appropriate driveshaft assembly and the engine driveshaft adapter and attaching bolts.		

CONDITIONAL INSPECTIONS

5-50. SUDDEN STOPPAGE — POWER ON OR OFF (CONT)

DATA REFERENCE	INSPECTION TASK DESCRIPTION	INITIAL MECH	INITIAL OTHER
BHT-230-CR&O-2	**(2)** If no visual evidence of damage is detected, perform an overhaul. Make an entry in component record to show reason for removal was sudden stoppage.		
Rolls-Royce 250-C30 Series Operation and Maintenance Manual, 14W2	**e.** Engine Mounts		
	(1) Inspect No. 1 and No. 2 engine mounts for cracks or distorted mount bolts.		
	(2) If driveshaft has been scrapped or sudden stoppage has occurred sufficient to crack engine mounts or yield connecting bolts, remove the affected engine and perform an overhaul evaluation.		
	(3) Make an entry in component record to show reason for removal was sudden stoppage.		
BHT-230-CR&O-2	**f.** Transmission and Mast Assembly		
	(1) If mast has evidence of torsional yielding, the mast and transmission shall be considered unserviceable and scrapped. If a main driveshaft required replacement (step d), the outboard quill will be unserviceable and scrapped.		
	(2) If mast does not have torsional yielding, main driveshafts were retained (step d), and transmission has no obvious damage that would render it nonrepairable, the transmission and mast shall have an overhaul evaluation. Make an entry in component record to show reason for removal was sudden stoppage.		
BHT-230-CR&O-2	**(3)** Replace collector gear. Inspect collector gear shaft for excessive runout of gear mounting flange. Runout of the gear flange must not exceed 0.0004 inch (0.0102 mm) when gear shaft is mounted on centers or on bearing journals.		
	g. Tail Rotor Driveshaft System		
BHT-230-CR&O-3	**(1)** Visually inspect tail rotor driveshaft tubes for evidence of torsional deformation.		

CONDITIONAL INSPECTIONS

5-50. SUDDEN STOPPAGE — POWER ON OR OFF (CONT)

DATA REFERENCE	INSPECTION TASK DESCRIPTION	INITIAL MECH	INITIAL OTHER
	(2) Remove gear coupling assembly at transmission tail rotor output quill. Disassemble as required to visually inspect condition of both drive and coast side of male and female coupling teeth.		
	(3) Inspect torque on tail rotor gearbox retaining nuts for 100 to 140 inch-pounds (11.3 to 16 Nm).		
	(4) If any of the following criteria is met, inspections specified by sudden stoppage caused by tail rotor strike (step 2) shall also be accomplished. If none of the four criteria is met, completion of step 2 is not required.		
	(a) Main rotor blade damage is sufficient to render blade nonrepairable.		
	(b) Gapping of tail rotor driveshaft disc couplings exceeds 0.005 inch (0.127 mm).		
	(c) Any evidence of torsional yielding has been found in tail rotor driveshaft tubes.		
	(d) Inspection of gear tooth coupling in step (2) revealed chipping or other damage to coupling teeth.		
BHT-230-CR&O-3	**h.** Tail Rotor Hub and Blade Assembly		
BHT-230-CR&O-3	If sudden stoppage originated at main rotor or transmission, tail rotor hub and blade assembly may remain in service provided there is no visible external damage. If visible damage is noted on tail rotor hub and blade assembly, remove tail rotor hub and blade assembly and perform overhaul evaluation. Make an entry in component record to show reason for removal was sudden stoppage.		
	2. Perform the following inspection if sudden stoppage is the result of a tail rotor strike.		
BHT-230-CR&O-3	**a.** Tail Rotor Driveshaft Hangers and Coupling		

CONDITIONAL INSPECTIONS

5-50. SUDDEN STOPPAGE — POWER ON OR OFF (CONT)

DATA REFERENCE	INSPECTION TASK DESCRIPTION	INITIAL MECH	INITIAL OTHER
	(1) Visually inspect all tail rotor driveshafts hangers. If shaft has been damaged by main rotor strike or circumstances other than torsional overload, hangers to which damaged shaft was attached shall be considered unserviceable and scrapped. If any shaft fails as a result of torsional load, all hangers, coupling, and shafts shall be considered unserviceable and scrapped.		
BHT-230-CR&O-2	**(2)** Remove gear coupling assembly at tail rotor output quill. Disassemble as required to inspect condition of both drive and coast side of male and female coupling teeth.		
BHT-230-CR&O-3	**(3)** If inspection reveals no condition as listed in step (1), and there is no obvious damage which would render hanger assemblies unserviceable, the hanger assemblies shall have an overhaul evaluation performed. Make an entry in component record to show reason for removal was sudden stoppage.		
Chapter 65	**b.** Tail Rotor Driveshafts		
	NOTE If one or more of conditions listed in step (a) through step (d) are noted, all driveshaft and bearing hangers shall be considered unserviceable and scrapped.		
	(1) Remove tail rotor driveshafts and inspect for following conditions:		
	(a) Adapter flanges for distortion and cracks.		
Chapter 65	**(b)** Shafts for concentricity and distortion. Inspect for crack(s) using fluorescent penetrant methods.		
	(c) Loose or sheared rivets.		
Chapter 65	**(d)** Scratches in excess of limits.		

CONDITIONAL INSPECTIONS

5-50. SUDDEN STOPPAGE — POWER ON OR OFF (CONT)

DATA REFERENCE	INSPECTION TASK DESCRIPTION	INITIAL MECH	INITIAL OTHER
	NOTE If driveshaft(s) or hanger assemblies are scrapped as the result of step (a) or step (b), perform a thorough inspection of hanger support structure for cracks, loose, or missing rivets and elongated mount holes.		
Chapter 65	**(2)** If inspection reveals no condition as listed in step (1), substep (a) through substep (d), then perform an inspection. Make an entry in component record to show reason for removal was sudden stoppage.		
BHT-230-CR&O-3	**c.** Tail Rotor Hub and Blade Assembly **(1)** If sudden stoppage originated at tail rotor blades, the tail rotor hub and blade assembly shall be considered unserviceable and nonrepairable.		
BHT-230-CR&O-3	**(2)** If sudden stoppage originated at tail rotor driveshaft or tail rotor gearbox, remove tail rotor hub and blade assembly and perform overhaul evaluation inspection. Make an entry in component record to show reason for removal was sudden stoppage.		
BHT-230-CR&O-3	**d.** Tail Rotor Gearbox **(1)** Inspect torque on tail rotor gearbox retaining nuts for 100 to 140 inch-pounds (11 to 16 Nm).		
	(2) Remove tail rotor gearbox. Check for cracks, sheared or bent attaching studs, dowel pin, and evidence of case distortion or output shaft distortion. If any of these conditions is noted, the gearbox is unserviceable and shall be scrapped.		
BHT-230-CR&O-2	**(3)** If inspection reveals no condition as listed in step (2), perform conditional inspection and overhaul evaluation. Make an entry in component record to show reason for removal was sudden stoppage.		
	e. In all instances of step b and step c, perform the following inspections:		

CONDITIONAL INSPECTIONS

5-50. SUDDEN STOPPAGE — POWER ON OR OFF (CONT)

DATA REFERENCE	INSPECTION TASK DESCRIPTION	INITIAL MECH	INITIAL OTHER
	(1) Tail rotor gearbox, vertical fin, and tail rotor guard attachment fittings for cracks, sheared rivets, or damaged connecting bolts.		
	(2) Boosted tail rotor flight controls from the hydraulic actuator to the pitch change linkage for damage to tubes, bellcranks, supports, fairleads, and bearings. Special attention should be paid to the support, bellcranks, and links mounted on the tail rotor gearbox.		
	(3) Tailboom structure for distortion, cracks, and loose or missing rivets, especially at the tail rotor driveshaft hanger support structure and at the tailboom to fuselage attachment area.		
Chapter 63 BHT-230-CR&O-3	**f.** If damage to the tail rotor gearbox, tail rotor driveshafts, or tail rotor driveshaft hanger assemblies is such that these items are scrapped as unserviceable, remove transmission and perform the following evaluation. Make an entry in component record to show reason for removal was sudden stoppage.		
BHT-230-CR&O-2	**(1)** Replace the collector gear.		
BHT-230-CR&O-2	**(2)** Inspect collector gear shaft for excessive runout of gear mounting flange. Runout of gear flange must not exceed 0.0004 inch (0.0101 mm) when gear shaft is mounted on centers or on bearing journals. Inspect collector gear shaft using magnetic particle method.		
BHT-230-CR&O-2	**(3)** Inspect transmission lower case duplex bearing. Replace bearing if rough or if any evidence of spalling or flaking is evident.		
BHT-230-CR&O-2	**(4)** Inspect center bearing case roller bearing. Replace bearing if any evidence of brinelling, spalling, or flaking is evident.		
BHT-230-CR&O-2	**(5)** Perform an overhaul evaluation of the tail rotor drive quill.		

CONDITIONAL INSPECTIONS

5-51. OVERTORQUE

DATA REFERENCE	INSPECTION TASK DESCRIPTION	INITIAL MECH	INITIAL OTHER
	DATE: _____ **W.O.** _____ **FACILITY:** _____ **HELICOPTER S/N:** _____ **REGISTRY NO.:** _____ **TOTAL TIME:** _____ **SIGNATURE:** _____ Overtorque is defined as any incident in which torsional loads are introduced into the helicopter dynamic system in excess of established limits. Refer to the engine manufacturer's manual for engine overtorque limits and inspection requirements.		
Rolls-Royce 250-C30 Series Operation and Maintenance Manual, 14W2	**1.** When overtorque has exceeded 105%, but did not exceed 115%, perform the following: **a.** Conduct a thorough visual inspection of the following assemblies (installed on the helicopter) for any evidence of damage, deformation, yielding, etc. **(1)** Main rotor hub and blades **NOTE** Cadmium plating on outside diameter of mast is 0.0003 to 0.0004 inch (0.0076 to 0.0102 mm). When measuring mast outside diameter at six places for out-of-round, ensure that 0.0003 to 0.0004 inch (0.0076 to 0.0102 mm) differential is considered when measuring plated surfaces or when plating may have been removed.		

CONDITIONAL INSPECTIONS

5-51. OVERTORQUE (CONT)

DATA REFERENCE	INSPECTION TASK DESCRIPTION	INITIAL MECH	INITIAL OTHER
	(2) Main rotor mast. Using a suitable micrometer, measure mast outside diameter at the minimum of six places for out-of-round condition; two measurements 90° to each other between the swashplate and drive hub assembly; two measurements 90° to each other just above the collective friction collet assembly, and two measurements 90° to each other approximately 2 inches (51 mm) below the static stop contact area on the mast. If any set of opposing measurements vary in excess of 0.002 inch (0.051 mm), the mast is suspected of bending and a runout inspection must be performed. **(3)** Start engine and check main rotor, while in a flat pitch condition, for any evidence of a 1/rev vibration. If one or more of the inspection requirements of step (1) or step (2) reveals an unsatisfactory condition, a mast runout inspection must be performed. If unsatisfactory conditions are not found, the mast runout inspection is not required. **(4)** Lift link upper and lower attachment fittings **(5)** Nodal beam mounts, attachment fittings, and travel stops **(6)** Transmission restraints and restraint fittings **(7)** Transmission top case **(8)** Inspect main driveshaft couplings for indications of overheating **(9)** Tail rotor hub, blades, and attachments **(10)** Swashplate and lever assembly **(11)** Drive assembly **b.** Inspect main transmission chip detectors and external oil filter for metal particles. **(1)** If chip detectors and external filter appear normal and there is no evidence of internal failure, operate the transmission for 5 hours, then check chip detectors and external filter. If chip detector and filter inspection does not reveal metal particles, the transmission is satisfactory for service.		

CONDITIONAL INSPECTIONS

5-51. OVERTORQUE (CONT)

DATA REFERENCE	INSPECTION TASK DESCRIPTION	INITIAL MECH	INITIAL OTHER
	(2) If metal particles indicating internal failure are found or if there is any evidence of internal failure, remove and overhaul the transmission. Make entry in component record to show reason for removal was overtorque. Clean all transmission system oil lines and replace oil coolers. **c.** After the next 25 hours, following an overtorque, conduct a thorough inspection of the following: **(1)** Main rotor hub assembly **(2)** Main rotor mast **(3)** Transmission top case **(4)** Transmission mount (nodal beam) link assemblies, link attachments, and arm and support assemblies **(5)** Cabin roof and beam at transmission mount (nodal beam) attachment points **(6)** Transmission restraint attachment at stop mounts, support, and cabin roof shell, and beam **(7)** Transmission electric chip detectors **(8)** Tail rotor hub, blades, and attachments **(9)** Swashplate and lever assembly **(10)** Drive assembly **2.** When overtorque exceeds 115%:		
BHT-230-CR&O-2 BHT-230-CR&O-3	**a.** Conduct a major overhaul on the following components. Make an entry in component record to show reason for removal was overtorque. **(1)** Main rotor hub **(2)** Mast assembly		

CONDITIONAL INSPECTIONS

5-51. OVERTORQUE (CONT)

DATA REFERENCE	INSPECTION TASK DESCRIPTION	INITIAL MECH	INITIAL OTHER
Chapter 62 BHT-230-CR&O-2	**NOTE** During overhaul of the main transmission, inspect gear patterns for scoring and top case for yielding. **(3)** Transmission assembly **(4)** Tail rotor hub **(5)** Inspect the main rotor blades. Pay particular attention to blade skins for distortion or debonding. **b.** Perform a thorough visual inspection of the following components. If no visual damage is found, the components may be retained in service. **(1)** Swashplate and lever assembly **(2)** Drive assembly **(3)** Main rotor and tail rotor blades **(a)** Do a visual and tap inspection. **(b)** If the blade shows sign of bond separation, scrap the blade. **(c)** If the tip or root end balance weights have moved, scrap the blade. **(d)** If the retention bushings are loose, scrap the blade. **(e)** If the skin on any blade is wrinkled or deformed, scrap all blades. **(f)** If the tip block shows evidence of movement or is loose, scrap the blade. **(g)** If the blades pass the inspection in step (a) through step (f), the blade can be returned to service.		

CONDITIONAL INSPECTIONS

5-51. OVERTORQUE (CONT)

DATA REFERENCE	INSPECTION TASK DESCRIPTION	INITIAL MECH	INITIAL OTHER
	c. After the next 25 hours following an overtorque, conduct a thorough inspection of the following: **(1)** Main rotor hub and blades **(2)** Transmission mount fittings, upper and lower attachment points **(3)** Cabin roof at transmission mount fittings **(4)** Transmission restraint attachments **(5)** Transmission electric chip detectors **(6)** Tail rotor hub, blades, and attachments **(7)** Swashplate and lever assembly **(8)** Drive assembly		

CONDITIONAL INSPECTIONS

5-52. OVERTORQUE — ONE ENGINE INOPERATIVE (OEI)

DATA REFERENCE	INSPECTION TASK DESCRIPTION	INITIAL MECH	INITIAL OTHER
Rolls-Royce 250-C30 Series Operation and Maintenance Manual, 14W2	**DATE:** _____ **W.O.** _____ **FACILITY:** _____ **HELICOPTER S/N:** _____ **REGISTRY NO.:** _____ **TOTAL TIME:** _____ **SIGNATURE:** _____ **1.** When a One Engine Inoperative (OEI) operation occurs in which engine torque has exceeded 86%, but did not exceed 103%, perform the following: **a.** Record duration and maximum engine torque in main transmission maintenance record. **b.** Refer to the engine manufacturer's manual for engine overtorque inspection requirements if engine torque exceeded 100%. **c.** If engine torque exceeded 100%, inspect main transmission chip detectors and external filter for metal particles. **(1)** If chip detectors and external filter appear normal, and there is no evidence of internal failure, the transmission is satisfactory for service. No other component inspections are required. **(2)** If metal particles indicating internal failure are found, remove the transmission for overhaul evaluation. Make entry in component record that reason for removal was OEI overtorque operation. Clean all transmission system oil lines and replace oil coolers.		

CONDITIONAL INSPECTIONS

5-52. OVERTORQUE — ONE ENGINE INOPERATIVE (OEI) (CONT)

DATA REFERENCE	INSPECTION TASK DESCRIPTION	INITIAL MECH	INITIAL OTHER
	d. Three OEI operations that exceed 86%, but do not exceed 103% engine torque are permissible within the rated life of the collector gear 222-040-109. After a third OEI occurrence, the collector gear must be removed from service and scrapped.		
	2. When an OEI operation occurs in which engine torque has exceeded 103%, perform the following:		
	a. Record duration and maximum engine torque in main transmission maintenance record.		
Rolls-Royce 250-C30 Series Operation and Maintenance Manual, 14W2	**b.** Refer to the engine manufacturer's manual for engine overtorque inspection requirements.		
BHT-230-CR&O-2	**c.** Perform overhaul of main transmission. Make entry in component record reason for removal was OEI overtorque operation.		
	(1) The collector gear 222-040-109 shall be scrapped at this overhaul.		
	(2) During overhaul of the main transmission, inspect gear patterns for scoring.		

CONDITIONAL INSPECTIONS

5-53. LIGHTNING STRIKE

DATA REFERENCE	INSPECTION TASK DESCRIPTION	INITIAL MECH	INITIAL OTHER
	DATE: _____ **W.O.** _____ **FACILITY:** _____ **HELICOPTER S/N:** _____ **REGISTRY NO.:** _____ **TOTAL TIME:** _____ **SIGNATURE:** _____ When the helicopter has had a lightning strike, the following precautions shall be followed: **NOTE** In all instances that follow, if significant damage has been found in any area, inspection shall be expanded in those areas until it extends beyond the zone of damage. **1.** Visually inspect all external surfaces of the helicopter with particular attention to main rotor blades and hub, the transmission and mast assembly, tail rotor blades and hub, tail rotor gearbox, horizontal stabilizer auxiliary fins, and vertical fin. Check electrical instruments and systems. **2.** If visual indications of damage are present, proceed as follows: **a.** Inspect main rotor blades. If blades show any of the following indications, scrap blades. **(1)** Inspect blades for signs of burns. Burn marks can be very minute. **(2)** Inspect entire surface of all blades for voids and delamination. **b.** Remove main rotor hub for overhaul. State lightning strike as reason for removal.		
Chapter 62 BHT-230-CR&O-2			

CONDITIONAL INSPECTIONS

5-53. LIGHTNING STRIKE (CONT)

DATA REFERENCE	INSPECTION TASK DESCRIPTION	INITIAL MECH	INITIAL OTHER
	c. Remove transmission and mast assembly for overhaul making note of lightning strike as reason for removal.		
	d. Remove tail rotor hub for overhaul. State lightning strike as reason for removal. Scrap blades if indications of burns or debonding are evident.		
	e. Remove tail rotor driveshaft bearing hangers and tail rotor gearbox and return for overhaul, stating lightning strike as reason for removal.		
	f. Check auxiliary fins for evidence of burning or debonding.		
	g. Inspect tailboom fitting for indication of arcing burns around mounting points of tail rotor gearbox and vertical fin.		
	3. If no visual indications or damage is found:		
BHT-230-CR&O-2	**a.** Remove main rotor hub grips.		
	(1) Visually inspect bearings for signs of electrical arcing, burning, or delamination.		
	(2) Visually check pitch change links at the drive assembly connections for arcing burns.		
BHT-230-CR&O-2	**(3)** If indications of arcing or burning are present, overhaul main rotor hub and drive assembly and replace the affected pitch change link, including all attaching hardware.		
BHT-230-CR&O-2	**(4)** If no indications are found, assemble main rotor hub.		
	b. Remove main rotor mast assembly. Without removal of the bearing from the mast, inspect visible portions of the bearing for signs of electrical arcing or burning. Rotate bearing during inspection. Check bearing for smooth rotation. Visually inspect the lower mast bearing race and driving spline on the mast for signs of arcing or burning.		

CONDITIONAL INSPECTIONS

5-53. LIGHTNING STRIKE (CONT)

DATA REFERENCE	INSPECTION TASK DESCRIPTION	INITIAL MECH	INITIAL OTHER
	(1) If indications of arcing, burning or roughness of the bearing are present, remove transmission and mast assembly and return for overhaul. State lightning strike as reason for removal. **(2)** If no indications are found, assemble transmission and mast assembly and return to limited service. After 5 hours, remove the chip detectors and filter and inspect for chips. If no indications are found, return transmission to full service. If indications are found, remove transmission and mast assembly and return it for overhaul. State lightning strike as reason for removal.		
BHT-230-CR&O-3	**c.** Remove output quill assembly from tail rotor gearbox. Visually inspect gear teeth for signs of electrical arcing or burning. Rotate tail rotor mast to check for smooth rotation of bearings. **(1)** If evidence of arcing or burning is found or if bearings do not rotate smoothly, remove gearbox and return it for overhaul, stating lightning strike as reason for removal. **(2)** If no indications of damage are found, and if bearings rotate smoothly, assemble gearbox and return it to limited service. After 5 hours, remove chip detector and inspect for chips. If no indications are found, return gearbox to full service. If indications are found, return gearbox for overhaul, stating lightning strike as reason for removal.		

CONDITIONAL INSPECTIONS

5-54. OVERSPEED

DATA REFERENCE	INSPECTION TASK DESCRIPTION	INITIAL MECH	INITIAL OTHER
	DATE: _____ **W.O.** _____ **FACILITY:** _____ **HELICOPTER S/N:** _____ **REGISTRY NO.:** _____ **TOTAL TIME:** _____ **SIGNATURE:** _____		
Rolls-Royce 250-C30 Series Operation and Maintenance Manual, 14W2	Rotor overspeed is defined as any incident in which 109% main rotor speed is exceeded. Refer to engine manufacturer's manual for engine overspeed limits and inspection requirement. **1.** If main rotor overspeed exceeds 109%, but not more than 113%, perform a thorough visual inspection of the following components. If no damage is found, no further inspection is required. **a.** Main rotor hub and blades **b.** Swashplate and lever assembly **c.** Drive assembly **d.** Tail rotor driveshafts and hanger assemblies **e.** Tail rotor gearbox assembly **f.** Tail rotor hub assembly **g.** Tail rotor blades **(1)** Perform visual and tap inspection. **(2)** If bond separation on the blade exists anywhere, scrap the blade.		

CONDITIONAL INSPECTIONS

5-54. OVERSPEED (CONT)

DATA REFERENCE	INSPECTION TASK DESCRIPTION	INITIAL MECH	INITIAL OTHER
	(3) If any movement of the tip or root end balance weights has occurred, scrap the blade. **(4)** If the retention bushings show evidence of looseness, scrap the blade. **(5)** If skin of either blade is wrinkled or deformed, scrap both blades. **(6)** If blade tip block shows evidence of movement or is loose, scrap the tail rotor blade. **(7)** If blades pass the previous inspection requirements and no other discrepancies exist, the blades are acceptable for service. **h.** Tail rotor controls **i.** Main transmission **j.** Main driveshaft **2.** Perform the following inspection if main rotor overspeed exceeds 113%, but not more than 120%: **a.** Remove and perform a thorough visual inspection as listed in step 1. **b.** Verify torque of tail rotor gearbox attachment studs. **3.** Perform the following inspections if main rotor overspeed exceeds 120%. Remove and perform overhaul inspection on the following components. Note overspeed as reason for removal. **a.** Main rotor hub and blades **b.** Main rotor mast **c.** Main transmission **d.** Main driveshafts **e.** Swashplate and lever assembly		

CONDITIONAL INSPECTIONS

5-54. OVERSPEED (CONT)

DATA REFERENCE	INSPECTION TASK DESCRIPTION	INITIAL MECH	INITIAL OTHER
	f. Drive assembly		
	g. Tail rotor driveshafts		
	h. Tail rotor driveshaft hanger assemblies		
	i. Tail rotor gearbox		
	j. Tail rotor hub and blades		
	k. Tail rotor controls		

CONDITIONAL INSPECTIONS

5-55. COMPRESSOR STALL OR SURGE

DATA REFERENCE	INSPECTION TASK DESCRIPTION	INITIAL MECH	INITIAL OTHER
	DATE: _____ **W.O.** _____ **FACILITY:** _____ **HELICOPTER S/N:** _____ **REGISTRY NO.:** _____ **TOTAL TIME:** _____ **SIGNATURE:** _____		
Rolls-Royce 250-C30 Series Operation and Maintenance Manual, 14W2	Engine compressor stall or surge is characterized by a sharp rumble or a series of loud sharp reports, severe engine vibration, and a rapid rise in measured gas temperature (MGT), depending on severity of surge. When a surge has been reported, progressively perform step 1 through step 6, as dictated by discrepant condition. Compressor stall may cause severe torsional loading of the main driveshaft resulting in scoring of the transmission input quill gears and damage to the main driveshaft, and distortion or damage to the tail rotor gearbox attachment fitting. **1.** Power Plant **a.** Examine inlet FOD screen or particle separator (if installed) for blockage. **b.** Inspect leading edges and tip areas of compressor rotor impeller for accumulation of dirt, evidence of severe erosion, or foreign object damage. **(1)** If contaminants are found, clean and perform a power check. **(2)** If erosion or foreign object damage appears to exceed acceptable limits, perform a teardown inspection.		

CONDITIONAL INSPECTIONS

5-55. COMPRESSOR STALL OR SURGE (CONT)

DATA REFERENCE	INSPECTION TASK DESCRIPTION	INITIAL MECH	INITIAL OTHER
Rolls-Royce 250-C30 Series Operation and Maintenance Manual, 14W2	**c.** If compressor stall or surge occurred during acceleration, refer to engine manufacturer's manual for troubleshooting procedures.		
Rolls-Royce 250-C30 Series Operation and Maintenance Manual, 14W2	**d.** If step a through step c do not reveal cause of surge, inspect turbine assembly.		
	2. Power Train		
	a. If compressor stall occurs below 59% main rotor mast torque, comply with the following:		
	(1) Remove magnetic chip detectors from transmission and tail rotor gearbox, and inspect for metal particles.		
	(2) If no indication of metal particles is found on chip detectors, clean chip detectors and reinstall. Return helicopter to limited flight status and repeat chip detector inspection in 5 to 10 hours. If positive indication of metal chips is found on chip detectors on initial or 5 to 10 hour inspection, return unit for overhaul, noting the reason.		
	b. If compressor stall occurs at 59% mast torque or above, comply with the following:		
	(1) Remove magnetic chip detectors from transmission and tail rotor gearbox, and inspect for metal particles. If no indication of metal particles is found on chip detectors, clean chip detectors and reinstall. If positive indication of metal chips is found on chip detectors, return unit for overhaul, noting the reason.		
Chapter 65	**(2)** Remove tail rotor gearbox port plug. Inspect gear teeth of pinions and gears using a high-intensity light source. If there is no evidence of scuffing, scoring, or other mechanical damage that would render gearbox unserviceable, reinstall plug and cover and torque gearbox attachment hardware. If gear teeth show evidence of scuffing, or scoring, or if gearbox has sustained other damage, remove gearbox and return for overhaul noting reason.		

CONDITIONAL INSPECTIONS

5-55. COMPRESSOR STALL OR SURGE (CONT)

DATA REFERENCE	INSPECTION TASK DESCRIPTION	INITIAL MECH	INITIAL OTHER
BHT-230-CR&O-2	**(3)** Remove both transmission input quills and inspect pinion gear teeth, using a 10X magnifying glass, for scoring or other damage. If no scoring or damage is found, assemble transmission. If scoring or damage is found, return transmission for overhaul, noting compressor stall as reason for return. **(4)** Remove both main driveshafts and engine adapters and perform overhaul, with particular attention to magnetic particle inspection. Main rotor mast assembly may be retained in service. **(5)** If no metal chips were found in step (1) and no scoring or damage was found in step (2) and step (3), return helicopter for limited flight and repeat chip detector inspection after 5 to 10 hours operation. If chips are found, return for overhaul noting reason. Clean all affected oil lines and replace oil coolers. **(6)** Perform a thorough visual inspection of the following components: **(a)** Tail rotor bearing hanger assemblies **(b)** Tail rotor driveshaft transmission coupling **(c)** Tail rotor driveshaft flexible disc assemblies **(d)** Tail rotor driveshafts **(e)** If any discrepancies are noted, remove and replace defective component(s). **3.** Rotating Controls **a.** Perform a close visual inspection of all rotating controls and replace as necessary. **4.** Tail Rotor Hub and Blades **a.** Perform a close visual inspection of the tail rotor hub and blades. **b.** Remove tail rotor blade bolts and inspect for deformation (shear offset).		

CONDITIONAL INSPECTIONS

5-55. COMPRESSOR STALL OR SURGE (CONT)

DATA REFERENCE	INSPECTION TASK DESCRIPTION	INITIAL MECH	INITIAL OTHER
	c. If any discrepancies are noted, remove and replace tail rotor hub and blade assembly.		
BHT-230-CR&O-3	**d.** Perform an overhaul inspection. Make an entry in component record to show that reason for removal was compressor stall or surge.		
	5. Main Rotor Hub and Blades		
	a. Perform a close visual inspection of the main rotor hub and blades.		
	b. Remove main rotor trunnion bearing to yoke attachment bolts and check for deformation (shear offset).		
	c. Inspect main rotor trunnion bearings for delamination, security of attachment, and play in bearing housing.		
	d. If any discrepancies are noted, remove and replace main rotor hub and blade assembly.		
BHT-230-CR&O-2	**e.** Perform an overhaul inspection. Make an entry in component record to show reason for removal was compressor stall or surge.		
	6. Airframe		
	a. Check tail rotor gearbox and vertical fin attachment fittings for loose or sheared rivets and cracks. If inspection shows negative indications of damage, return helicopter to flight status. If positive evidence of damage is found, comply with step b through step d.		
	b. Make close visual inspection of complete tailboom structure for distortion, buckles, skin cracks, and sheared or loose rivets, paying particular attention to tailboom/mid-fuselage splice and hanger bearing support structure.		
	c. Make close visual inspection of main pylon support and engine mount attachment structure for distortion, buckles, cracks, sheared or loose rivets, etc.		

CONDITIONAL INSPECTIONS

5-55. COMPRESSOR STALL OR SURGE (CONT)

DATA REFERENCE	INSPECTION TASK DESCRIPTION	INITIAL MECH	INITIAL OTHER
	d. If discrepancies found during inspection in step a through step c cannot be repaired by standard procedures, replace discrepant assembly.		

COMPONENT OVERHAUL SCHEDULE

5-56. COMPONENT OVERHAUL SCHEDULE

The Component Overhaul Schedule (Table 5-2) provides the time interval between overhaul for each applicable helicopter component.

WARNING

DO NOT APPLY TOLERANCES TO PARTS WITH A LIMITED AIRWORTHINESS LIFE (CHAPTER 4).

WARNING

DO NOT EXCEED RETIREMENT LIFE FOR CRITICAL COMPONENTS. REFER TO AIRWORTHINESS LIMITATIONS SCHEDULE (CHAPTER 4).

SOME PARTS INSTALLED AS ORIGINAL EQUIPMENT ON MILITARY HELICOPTERS MAY HAVE A LOWER AIRWORTHINESS LIFE AND/OR OVERHAUL SCHEDULE THAN WHEN USED ON A COMMERCIAL HELICOPTER. CONSEQUENTLY, PARTS THAT HAVE BEEN USED ON MILITARY HELICOPTERS SHOULD NOT BE USED ON COMMERCIAL HELICOPTERS.

CAUTION

OVERHAUL SCHEDULE FOR SOME KIT COMPONENTS AND/OR PARTS IS NOT COVERED IN THIS SCHEDULE. REFER TO APPLICABLE SERVICE INSTRUCTIONS FOR KIT COMPONENTS SCHEDULE.

NOTE

Refer to paragraph 5-6 for information on inspection and overhaul tolerance.

NOTE

Neither assignment of a time period for overhaul of a component or failure to assign a time period for overhaul of a component constitutes a warranty of any kind. The only warranty applicable to helicopter and any component is that warranty included in the Purchase Agreement for the helicopter or component.

The overhaul interval specified for any given part number contained in this Component Overhaul Schedule applies to all successive dash numbers for that item unless otherwise specified.

Refer to Rolls-Royce 250-C30 Series Operation and Maintenance Manual, 14W2 for power plant component overhaul intervals.

Table 5-2. Component Overhaul Schedule

NOMENCLATURE	PART NUMBER (1)	OVERHAUL INTERVAL
	ROTORS	
Swashplate and Lever Assembly	222-010-400-127	2500 hours
Drive Assembly	222-010-401-121	2500 hours
Tail Rotor Hub Assembly	222-012-701-119	2500 hours

Table 5-2. Component Overhaul Schedule (Cont)

NOMENCLATURE	PART NUMBER △1	OVERHAUL INTERVAL
	POWER TRAIN	
Main Transmission Assembly	222-040-003-119	△2 3000 hours
Main Transmission Assembly	222-040-003-119	5000 hours
Tail Rotor Gearbox Assembly	222-042-001-007	△3 3000 hours
Tail Rotor Gearbox Assembly	222-042-001-007	5000 hours
Main Driveshaft	222-044-685-101	5000 hours/ 5 years
Oil Cooler Blower	230-365-001-101	3000 hours
	HYDRAULICS	
Servo Actuator	222-382-001-111	10,000 hours/ 10 years

NOTES:

△1 Operating time specified for overhaul of any given part number in this schedule applies to all successive dash numbers, unless otherwise specified.

△2 An interim inspection is required at 3000 hours for a new transmission and 3000 hours after each overhaul (BHT-230-CR&O-2).

△3 An interim inspection is required at 3000 hours for a new tail rotor gearbox and 3000 hours after each overhaul (BHT-230-CR&O-3).