A Textron Company

ALERT SERVICE BULLETIN **505-25-47**

PSL # 2811

19 August 2025

MODEL AFFECTED: **505**

SUBJECT: **IDENTIFICATION OF TAIL CONE ASSEMBLIES AND HISTORICAL SERVICE RECORDS, ONE-TIME VERIFICATION AND CORRECTION OF.**

HELICOPTERS AFFECTED: **Serial numbers 65011 and subsequent.**

[Serial numbers 65443 through 65445, 65447 and subsequent will have the correct identification on tail cone assemblies and Historical Service Records (HSR) prior to delivery and are **not affected** by this bulletin if fitted with the original tail cone assembly.]

COMPLIANCE: **PART I:** Within 55 flight hours or 90 days, whichever comes first, following the release date of this bulletin.

PART II: If required by **PART I**, within 330 flight hours or 6 months, whichever comes first, following the accomplishment of **PART I** of this bulletin.

DESCRIPTION:

Bell was made aware that tail cone assemblies have been identified with the incorrect part number on the tail cone assembly identification plate and Historical Service Records (HSR). This bulletin is being published to provide instructions to verify installed tail cone assemblies on affected helicopters and, as necessary, install a replacement identification plate to the tail cone assembly as well as correcting the HSR information.
The **COMPLIANCE** of this bulletin includes maintenance tolerance consideration.

Applicability of this bulletin to any spare part shall be determined prior to its installation on an affected helicopter.

APPROVAL:

The engineering design aspects of this bulletin are Transport Canada Civil Aviation (TCCA) approved.

CONTACT INFO:

For any questions regarding this bulletin, please contact:

Bell Product Support Engineering
Tel: 1-450-437-2862 / 1-800-363-8023 / productsupport@bellflight.com

MANPOWER:

Approximately 0.5 man-hour is required to complete **PART I** of this bulletin.
Approximately 2.5 man-hours are required to complete **PART II** of this bulletin.
This estimate is based on hands-on time and may vary with personnel and facilities available.

WARRANTY:

Owners / Operators of Bell Helicopters who comply with the instructions in this bulletin will be eligible to receive replacement part and labor as applicable, listed in the bulletin. The https://MyBell.com portal allocates specific warranty entitlement for an aircraft by serial number. The Product Service Letter (PSL) number which will be listed below the bulletin number on the introduction page. This is going to be a required field when submitting a claim on the Bulletins Tab for replacement parts and labor. If you receive an ASB or TB that does not have a PSL number, then there is no warranty entitlement for that bulletin.

Labor entitlement: Yes, $275.00 USD for **PART II** only.

To receive parts, labor, under warranty:

- Comply with the instructions for **PART II** contained in this Bulletin no later than 9 months from date of release of this Bulletin.
- If there is a PSL number identified in the bulletin you will be required to enter this PSL number which will validate warranty entitlement for the selected aircraft. Please ensure that you use the Bulletin tab on the warranty section on https://MyBell.com portal to file your claim.

NOTE: A user guide on how to submit a claim can be found here:
How to Submit PSL Bulletin Claims.

MATERIAL:

Required Material:
The following material is required for the accomplishment of this bulletin and may be obtained through your Bell Supply Center.

Part Number	Nomenclature	Qty (Note)
100-140-6	IDENTIFICATION PLATE	1 (1)

NOTE 1: Only required if the tail cone assembly identification plate is not correctly identified following verification in **PART I**.

Consumable Material:
The following material is required to accomplish this bulletin, but may not require ordering, depending on the operator's consumable material stock levels. This material may be obtained through your Bell Supply Center.

Part Number	Nomenclature	Qty (Note)	Reference *
2230-00425-00	EPOXY POLYAMIDE PRIMER	1 PT (1, 2)	C-204
2010-12481-01	SEALANT (MIL-PRF-81733)	1 PT (1, 2)	C-251
2000-01022-00	ADHESIVE	1 PT (1, 2)	C-317
2100-06673-00	ISOPROPRYL ALCOHOL	1 GAL (1, 2, 3)	C-385

* C-XXX numbers refer to the consumables list in the BHT-ALL-SPM, Standard Practices Manual

NOTES:

1. Quantity indicated is the format that the product is delivered in. Actual quantity required to accomplish the instructions in this bulletin may be less than what has been delivered.
2. Only required if the tail cone assembly identification plate is not correctly identified following verification in **PART I** of this bulletin.
3. Toluene 2110-06227-00 (C-306) or Ethyl Alcohol (C-339) can be used as an alternate.

SPECIAL TOOLS:

Vibrating Stylus (or equivalent).

WEIGHT AND BALANCE:

Note affected.

ELECTRICAL LOAD DATA:

Not affected.

REFERENCES:

505-MM, Maintenance Manual, Chapter 53 and 65.
BHT-ALL-SPM, Standard Practices Manual, Chapters 4 and 8.
BHT-ALL-SRM, Structural Repair Manual, Chapter 3.

PUBLICATIONS AFFECTED:

None affected.

ACCOMPLISHMENT INSTRUCTIONS:

PART I - Verification of tail cone assembly part number.

1. Prepare the helicopter for maintenance.

2. Remove the exhaust fairing (444AT) (DMC-505-A-53-40-05-00A-520A-A).

3. Verify the part number and serial number of the tail cone assembly on the identification plate (1, Figure 1). Note the part number and serial number for reference in the following steps.

   a. If the part number **is** SLS-030-600-**023** or SLS-030-600-**025**, accomplishment of **PART II** is required within the interval identified in the **COMPLIANCE** section of this bulletin. Go to step 4.

   b. If the part number **is not** SLS-030-600-**023** or SLS-030-600-**025**, no further action is required. Go to step 4.

4. Install the exhaust fairing (444AT) (DMC-505-A-53-40-05-00A-720A-A).

5. Make an entry in the helicopter logbook and historical service records indicating compliance with **PART I** of this Alert Service Bulletin.

PART II – Replacement of tail cone assembly identification plate and correction of Historical Service Record.

1. Prepare helicopter for maintenance.

2. If not already accomplished, remove the exhaust fairing (444AT) (DMC-505-A-53-40-05-00A-520A-A).

3. Prepare replacement identification plate (1, Figure 1) by using a vibrating stylus, or equivalent, and vibroetch the part number and serial number to be added in the appropriate location on the identification plate as required in the steps below:

a. The depth of the vibroetch must not be more than 0.005 inch (0.127 mm).

b. For tail cone assemblies with an existing identification plate with the part number SLS-030-600-**023** (noted in step 3 of **PART I**), vibroetch the part number **SLS-030-600-007** on the replacement identification plate.

c. For tail cone assemblies with an existing identification plate with the part number SLS-030-600-**025** (noted in step 3 of **PART I**), vibroetch the part number **SLS-030-600-009** on the replacement identification plate.

d. Vibroetch the serial number (noted in step 3 of **PART I**) of the existing identification plate on the replacement identification plate.

4. Remove the forward driveshaft cover (450AT) (DMC-505-A-53-50-02-00A-520A-A).

5. Remove aft driveshaft assembly (DMC-505-A-65-10-03-00A-520A-A).

6. Remove two rivets (2) holding identification plate (1) to the tail cone assembly (BHT-ALL-SRM, Chapter 3). Remove the identification plate (1) and scrap/destroy the removed identification plate. Clean tail cone assembly surface and remove all residue using isopropyl alcohol (C-385). Do not remove the primer.

   a. If damage to the primer occurs during this step, touch up with wet unreduced primer (C-204) prior to continuing to the following steps. Allow sufficient time to dry.

7. Install replacement identification plate (1), created in step 3, using the following procedures:

   a. Bond the replacement identification plate (1) to the prepared area of the tailcone assembly using adhesive (C-317) (BHT-ALL-SPM, Chapter 8, Paragraph 8-6). Remove excess adhesive squeeze-out and allow sufficient time to cure.

   b. Filet seal edges around replacement identification plate (1) with sealant (C-251). Allow sufficient time for sealant to cure.

8. Apply wet unreduced primer (C-204) to surface of the sealant (C-251) applied in step 7.b. and any surrounding exposed bare metal (BHT-ALL-SPM, Chapter 4).

9. Install aft driveshaft assembly (DMC-505-A-65-10-03-00A-720A-A).

10. Install forward driveshaft cover (450T) (DMC-505-A-53-50-02-00A-720A-A).

11. Install the exhaust fairing (444AT) (DMC-505-A-53-40-05-00A-720A-A).

12. Annotate the Historical Service Record (HSR) of the tail cone assembly to reflect the part number and serial number of the replacement identification plate.

a. For HSRs with part number SLS-030-600-**023** identified, strike through the **-023** and add **-007** beside the part number.

b. For HSRs with part number SLS-030-600-**025** identified, strike through the **-025** and add **-009** beside the part number.

c. Strike through the HSR Nomenclature section as follows:
TAIL CONE ASSY ~~WITH DECAL~~

13. Make an entry in the helicopter logbook and historical service records indicating compliance with **PART II** of this Alert Service Bulletin.

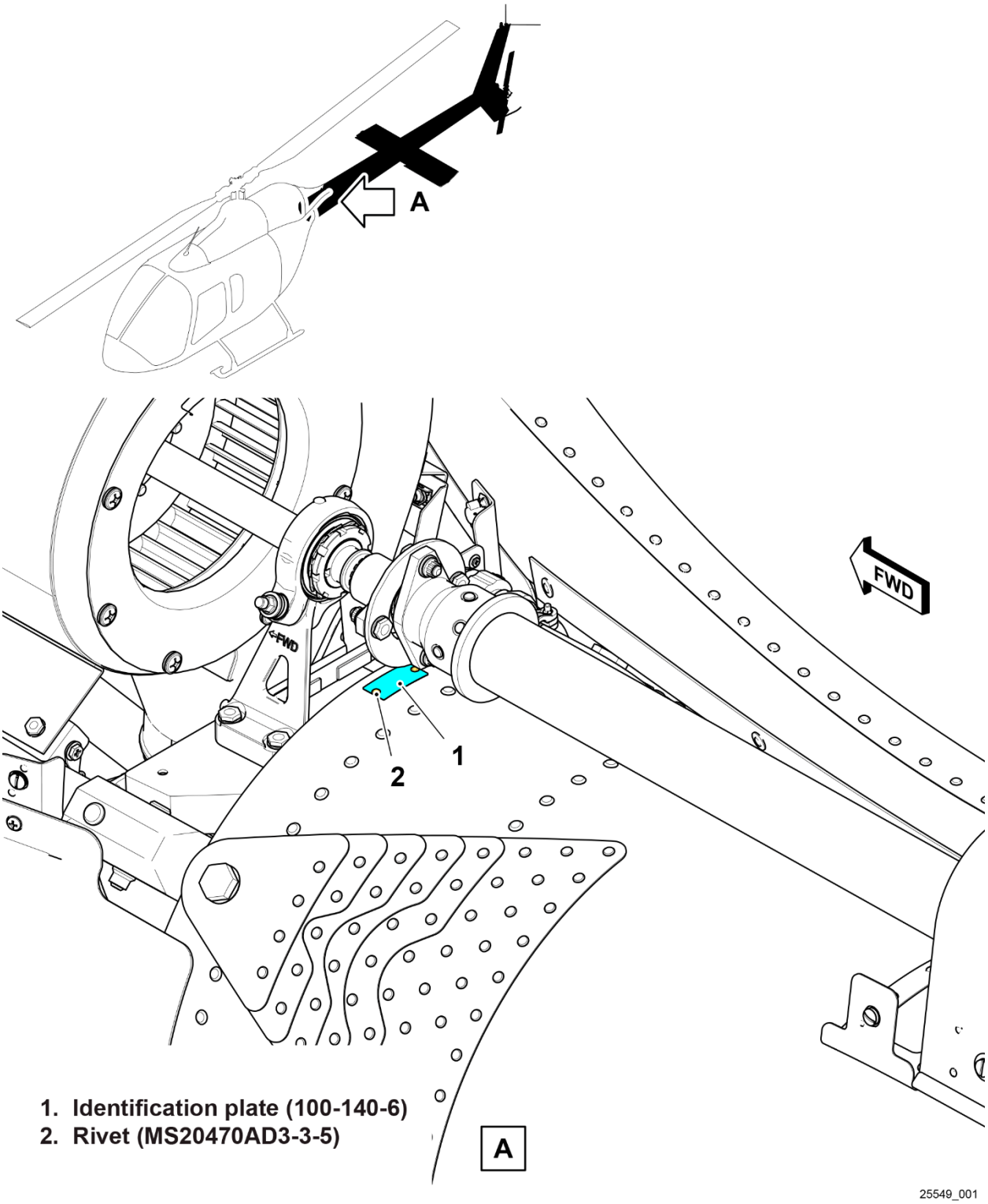

Figure 1 – Tail Cone Assembly Identification Plate Location