A Textron Company

ALERT SERVICE BULLETIN **505-25-46**

PSL #2691

10 June 2025

Revision A 1 December 2025

MODEL AFFECTED: **505**

SUBJECT: **PILOT AND COPILOT CYCLIC AND COLLECTIVE STICK ASSEMBLIES, INSPECTION, REWORK, AND INTRODUCTION OF AIRWORTHINESS LIFE LIMITATION.**

HELICOPTERS AFFECTED: **PART I - Serial numbers 65011 through 65505, 65507 through 65512, 65514 through 65616, 65618 through 65636, 65638, 65641, 65644, 65645, 65647, 65649, 65652 through 65658, 65660, 65662, 65663, 65665, 65667, 65675 through 65680, 65682, 65692, 65694, 65697 through 65701, and 65704.**

[Serial numbers **not listed** above and **65705 and subsequent** will have the intent of **PART I** of this bulletin accomplished prior to delivery.]

PART II - Serial numbers 65011 and subsequent.

[Serial numbers 65506, 65513, 65600, 65617, 65621, 65625, 65627, 65630, 65633 through 65635, 65637, 65639, 65640, 65642, 65643, 65645, 65646, 65648, 65650, 65651, 65659, 65661, 65664, 65666, 65668 through 65677, 65679, 65681, 65683 through 65691, 65693, 65695 through 65703, and 65705 and subsequent will have the intent of **PART II** of this bulletin accomplished prior to delivery.]

COMPLIANCE:

PART I – Within 110 flight hours or 3 months, whichever comes first, following the release date of **Revision A** of this Alert Service Bulletin.

PART II – Prior to next flight following accomplishment of **PART I** of this Alert Service Bulletin and incorporation of the associated Chapter 4 revision of the 505-MPI Maintenance Planning Information.

DESCRIPTION:

Bell has a safety of flight concern related to the switches installed in the current pilot and copilot cyclic and collective grip assemblies. The switches have no protection on the soldered joints to prevent a short of the exposed contacts and wires.

PART I of this bulletin provides instructions to disassemble the grip assemblies of the pilot and copilot cyclic and collective grip assemblies, inspect the solder joints of all the switches to ensure that they are conforming to required soldering practices. If acceptable, silicone sealant (C-307) will be applied over the exposed contacts and wiring of the switches. If a solder joint is not acceptable it will need to be repaired, then the silicone sealant (C-307) applied. All collective stick assemblies will be re-identified with new part numbers showing compliance with this bulletin. The **COMPLIANCE** of **PART I** includes maintenance tolerance consideration.

PART II of this bulletin introduces an airworthiness life limitation of 16,000 flight hours to the copilot collective stick tube assembly based on fatigue assessment testing data. The copilot collective tube assembly with the new airworthiness life limitation is being assigned a new part number M207-20M302-045 during accomplishment of **PART I** of this bulletin and will be reflected in a revision of the 505-MPI Maintenance Planning Information Chapter 4.

Revision A of this bulletin corrects the **HELICOPTERS AFFECTED** section with applicable helicopter serial numbers, the **COMPLIANCE** section reflecting **Revision A** release date, and introduction of Revision A of the Mandatory Service Bulletin (MSB) MSB-M207-003 affecting additional cyclic and collective stick assemblies. The MSB revision also allows the use of conformal coating (C-054) as an alternate to the clear RTV-732 (C-307).
Owners/operators who have accomplished the intent of the original release of this Alert Service Bulletin are <u>not required</u> to perform **Revision A**.

Applicability of this bulletin to any spare part shall be determined prior to its installation on an affected helicopter.

APPROVAL:

The engineering design aspects of this bulletin are Transport Canada Civil Aviation (TCCA) approved.

CONTACT INFO:

For any questions regarding this bulletin, please contact:

Bell Product Support Engineering
Tel: 1-450-437-2862 / 1-800-363-8023 / productsupport@bellflight.com

MANPOWER:

Approximately 4.0 man-hours are required to complete **PART I** of this bulletin.
An additional approximate 6.0 man-hours may be required to remove/install the pilot and copilot cyclic and collective stick assemblies from the helicopter to facilitate accomplishment of **PART I** of this bulletin.
Approximately 0.5 man-hours are required to complete **PART II** of this bulletin.
This estimate is based on hands-on time and may vary with personnel and facilities available.

WARRANTY:

Owners / Operators of Bell Helicopters who comply with the instructions in this bulletin will be eligible to receive replacement part and labor as applicable, listed in the bulletin. The https://MyBell.com portal allocates specific warranty entitlement for an aircraft by serial number. The Product Service Letter (PSL) number which will be listed below the bulletin number on the introduction page. This is going to be a required field when submitting a claim on the Bulletins Tab for replacement parts, labor, and/or freight. If you receive an ASB or TB that does not have a PSL number, then there is no warranty entitlement for that bulletin.

Labor entitlement: YES, $440.00 USD after accomplishment of **PART I** of this bulletin.

To receive labor under warranty:

- Comply with the instructions for **PART I** contained in this Bulletin no later than 3 months from date of release of this Bulletin.
- If there is a PSL number identified in the bulletin you will be required to enter this PSL number which will validate warranty entitlement for the selected aircraft. Please ensure that you use the Bulletin tab on the warranty section on https://MyBell.com portal to file your claim.

NOTE: A user guide on how to submit a claim can be found here:
How to Submit PSL Bulletin Claims.

MATERIAL:

Required Material:

Refer to the Mecaer Aviation Group's Mandatory Service Bulletin MSB-M207-003 (Revision A).

-NOTE-

As an alternate procedure to the application of decals MGXM19761, MGXM19760, and MGXM19758 required in the instructions of **Part I, II, and III** of the MSB-M207-003 Mandatory Service Bulletin, using a permanent white ink marker (or equivalent) identifying the new part number designations then overcoated with a thin coat of polyurethane enamel clearcoat (C-233) is acceptable.

The decal kits EPLB/1304, EPLB/1369, and EPLB/1384 contain more decals than required for the accomplishment of the MSB-M207-003 Mandatory Service Bulletin. They may be obtained through your Bell Supply Center. This would be an owner/operator incurred expense.

Consumable Material:

Refer to the Mecaer Aviation Group's Mandatory Service Bulletin MSB-M207-003 (Revision A).

The following table of consumable materials is being provided as a convenience to correlate the materials required for the accomplishment of the Mandatory Service Bulletin MSB-M207-003 (Revision A) with Bell equivalent consumable materials.

This material may be obtained through your Bell Supply Center.

Part Number	Nomenclature	Qty (Note)	Reference *
COMMERCIAL	POLYURETHANE ENAMEL (CLEAR)	1 GAL (1)	C-233
2110-00009-00	DEGREASER SOLVENT	1 GAL (1)	C-304
2110-00010-00	ALIPHATIC NAPHTA	1 GAL (1)	C-305
COMMERCIAL	SILICONE ADHESIVE (RTV-732 **CLEAR**)	A/R (3)	C-307
2100-06673-00	ISOPROPYL ALCOHOL	1 GAL (1,2)	C-385
COMMERCIAL	ABRASIVE PAD OR CLOTH	A/R	C-406
2100-00325-00	SOLDERING FLUX	1 GAL (1)	C-532
COMMERCIAL	SOLDER (ANSI J-STD-006 OR QQ-S-571)	A/R	C-538

Part Number	Nomenclature	Qty (Note)	Reference *
COMMERCIAL	ADJUSTABLE TIEDOWN STRAP	A/R	C-592
COMMERCIAL	RUBBER GLOVES	A/R	N/A
COMMERCIAL	SPONGE	A/R	N/A

* C-XXX numbers refer to the consumables list in the BHT-ALL-SPM, Standard Practices Manual

NOTES:

1. Quantity indicated is the format that the product is delivered in. Actual quantity required to accomplish the instructions in this bulletin may be less than what has been delivered.
2. Toluene 2110-06227-00 (C-306) or Ethyl Alcohol (C-339) can be used as an alternate.
3. Conformal coating (C-054) may be used as an alternate to RTV-732 (CLEAR) (C-307).

SPECIAL TOOLS:

Refer to the Mecaer Aviation Group's Mandatory Service Bulletin MSB-M207-003 (Revision A).

WEIGHT AND BALANCE:

Not affected.

ELECTRICAL LOAD DATA:

Not affected.

REFERENCES:

505-MM, Maintenance Manual, Chapter 67.
BHT-ALL-ELEC, Electrical standard Practice Manual, Chapter 4.
MSB-M207-003 (Revision A), Mecaer Aviation Group Mandatory Service Bulletin.

PUBLICATIONS AFFECTED:

505-IPC, Illustrated Parts Catalogue, Chapter 67.
505-MPI, Maintenance Planning Information, Chapter 4.

ACCOMPLISHMENT INSTRUCTIONS:

PART I – Pilot and copilot cyclic and collective stick assemblies, inspection, rework, and re-identification.

1. Prepare the helicopter for maintenance.

-NOTE-

Flight hour determination may be accomplished by reviewing the historical flight log records of the helicopter to identify how many flight hours the copilot collective stick assembly has been installed in the helicopter.

2. Determine the flight hours of the copilot collective stick assembly M207-20M479-043 or M207-20M479-047. Record the flight hours for future reference, as this information will be used in **PART II** of this Alert Service Bulletin.

   a. If the flight hours cannot be determined, a conservative approach using the current helicopter total time in service flight hours can be used for the copilot collective stick assembly.

   b. If the flight hours cannot be determined, and the owner/operator does not wish to use the conservative helicopter total time in service flight hours, the copilot collective stick assembly M207-20M479-043 or M207-20M479-047 will require replacement with a copilot collective stick assembly M207-20M479-051. This will be received as a zero flight hour time component with Historical Service Records (HSR) reflecting such. **This replacement will be an owner/operator paid expense**.

-NOTE-

Although accomplishment of the Mecaer Aviation Group's Mandatory Service Bulletin MSB-M207-003 (Revision A) can be accomplished without removal of pilot and copilot cyclic and collective stick assemblies from the helicopter; to facilitate the inspection and rework procedures it may be more convenient to be accomplished on a work bench. For removal and installation instructions of the pilot and copilot cyclic and collective stick assemblies, refer to the 505-MM Maintenance Manual Chapter 67.

-NOTE-

For solder inspection criteria required for the accomplishment of the MSB-M207-003 Mandatory Service Bulletin (Revision A), refer to the BHT-ALL-ELEC Electrical Standard Practice Manual Chapter 4.

-NOTE-

As an alternate procedure to the application of the decals MGXM19761, MGXM19760, and MGXM19758 required in the instructions of **Part I, II, and III** of the MSB-M207-003 Mandatory Service Bulletin (Revision A), using a permanent white ink marker (or equivalent) identifying the new part number designations then overcoated with a thin coat of polyurethane enamel clearcoat (C-233), is acceptable.

-NOTE-

For pilot and copilot cyclic and collective stick assemblies being inspected, reworked, and re-identified using the instructions of **Part I, II, III, V, VI,** and **VII** of the MSB-M207-003 Mandatory Service Bulletin (Revision A), the new component part numbers being added to the stick assemblies are to have the part number suffix of **FM** added to them, representing a **F**ield **M**odified component.

Example: M207-20M479-051**FM** (copilot collective stick assembly)
M207-20M302-045**FM** (copilot collective stick tube assembly)
M207-20M478-055**FM** (pilot collective stick assembly)
M207-20M476-049**FM** (pilot cyclic stick assembly)
M207-20M477-049**FM** (copilot cyclic stick assembly)
M207-20M479-043**FM** (co-pilot collective stick assembly)
M207-20M476-041**FM** (pilot cyclic stick assembly)
M207-20M477-043**FM** (co-pilot cyclic stick assembly)

3. Accomplish the instructions of the MSB-M207-003 Mandatory Service Bulletin (Revision A).

4. If removed from the helicopter, install the pilot and copilot cyclic and collective stick assemblies (505-MM, Chapter 67).

5. Make an entry in the helicopter logbook and historical service records indicating compliance with **PART I** of this Alert Service Bulletin.

PART II – Introduction of airworthiness life limitation for copilot collective stick tube assembly M207-20M302-045.

-NOTE-

Blank HSR forms are available for download or printing from the https://MyBell.com technical publication portal.

1. Using the copilot collective stick assembly flight hours recorded during the accomplishment of **PART I** of this bulletin, create an HSR for the copilot collective stick assembly M207-20M479-051, M207-20M479-051FM, or M207-20M479-043FM identifying that it contains components with an airworthiness life limitation. Create a second HSR for the copilot collective stick tube assembly M207-20M302-045 and assign an airworthiness life limitation of 16,000 flight hours on the HSR.

2. Insert the newly created HSRs into the helicopter records.

3. Make an entry in the helicopter logbook and historical service records indicating compliance with **PART II** of this Alert Service Bulletin.

MECAER | AVIATION | GROUP

Via per Arona, 46
28021 Borgomanero (NO) - Italy
Tel.: (+39) 0322 83711 – Fax (+39) 0322 844081
Web: www.mecaer.com
Mail: info@mecaer.com

SERVICE BULLETIN

N° **MSB-M207-003**

DATE: 06 December 2024

REV. A 02 September 2025

Compliance with this bulletin is: **MANDATORY**

MAG IS NOT RESPONSIBLE FOR ANY OCCURRENCE/MALFUNCTION/DEFECT THAT MAY ARISE FROM THE ERRONEOUS/NOT IMPLEMENTATION OF THE PRESENT SERVICE BULLETIN

SUBJECT

PILOT AND CO-PILOT GRIPS UPGRADE PROCEDURES.

SOURCE

BH request.

REASON

The present document provides the procedures to upgrade the pilot and co-pilot grips by applying the sealant on the soldered joints. The soldered joints rework procedure is included in this document in the event that the wirings becomes detached or if the soldered joints rework procedure is necessary.

The procedures are divided into seven parts. The parts are as follows:

- **Part I:** Upgrade of co-pilot collective stick assembly from P/N M207-20M479-047 to P/N M207-20M479-051.
- **Part II:** Upgrade of pilot collective stick assembly from P/N M207-20M478-051/-053 to P/N M207-20M478-055.
- **Part III:** Upgrade of pilot cyclic stick assembly from P/N M207-20M476-045 to P/N M207-20M476-049 and of co-pilot cyclic stick assembly from P/N M207-20M477-045 to P/N M207-20M477-049.
- **Part IV:** Rework of the solder joints.
- **Part V:** Rework of co-pilot collective stick assembly P/N M207-20M479-043.
- **Part VI:** Rework of pilot cyclic stick assembly P/N M207-20M476-041.
- **Part VII:** Rework of co-pilot cyclic stick assembly P/N M207-20M477-043.

Revision A is issued to extend the applicability to P/N M207-20M479-043, P/N M207-20M476-041 and P/N M207-20M477-043 and to include conformal coating as an alternative to RTV sealant.

ASSEMBLY/COMPONENTS AFFECTED

B505 stick assemblies P/N as per Table 1.

Item	Mecaer Aviation Group P/N	BH P/N
Co-pilot collective stick assembly	M207-20M479-047	N/A
Pilot collective stick assembly	M207-20M478-051	N/A
Pilot collective stick assembly	M207-20M478-053	N/A
Pilot cyclic stick assembly	M207-20M476-045	N/A
Co-pilot cyclic stick assembly	M207-20M477-045	N/A
Co-pilot collective stick assembly	M207-20M479-043	N/A
Pilot cyclic stick assembly	M207-20M476-041	N/A
Co-pilot cyclic stick assembly	M207-20M477-043	N/A

Table 1 - Applicable P/N

TIME OF COMPLIANCE

As per H/C manufacturer's instructions.

MANPOWER

To comply with this Service Bulletin the following man-hours (MMH) are deemed necessary:

Part I:	Upgrade of M207-20M479-047 to M207-20M479-051:	0.75 MMH
Part II:	Upgrade of M207-20M478-051/-053 to M207-20M478-055:	1.20 MMH
Part III:	Upgrade of M207-20M476-045 to M207-20M476-049:	1.00 MMH
	Upgrade of M207-20M477-045 to M207-20M477-049:	1.00 MMH
Part IV:	Rework of solder joints:	0.10 MMH per each joint
Part V:	Rework of M207-20M479-043 to M207-20M479-043FM:	0.75 MMH
Part VI:	Rework of M207-20M476-041 to M207-20M476-041FM:	1.00 MMH
Part VII:	Rework of M207-20M477-043 to M207-20M477-043FM:	1.00 MMH

Man-hours are based on hands-on time and may change with available personnel and facilities. Waiting time is not included.

WARRANTY

The warranty for new spare parts is valid from 12 (twelve) months from the date of delivery.

PARTS/MATERIALS

The following materials are required for compliance with **Part I** of this Bulletin:

P/N	Description	Q.ty
EPLB/1369, which includes:	Decal (MGXM19761)	1

Table 2 – Required Materials (Part I)

The following materials are required for compliance with **Part II** of this Bulletin:

P/N	Description	Q.ty
EPLB/1369, which includes:	Decal (MGXM19760)	1
	Decal (LDG LIGHT)	AR
	Decal (FLY)	AR
	Decal (IDLE)	AR
EPLB/1384, which includes:	Decal (THROTTLE)	AR
	Decal (ON)	AR

Table 3 – Required Materials (Part II)

The following materials are required for compliance with **Part III** of this Bulletin:

P/N	Description	Q.ty
EPLB/1304, which includes:	Decal (MGXM19758)	1

Table 4 – Required Materials (Part III)

The following consumable materials are required for compliance with this Bulletin:

WARNING

BEFORE USE, MAKE SURE TO KNOW THE SAFETY PRECAUTIONS AND FIRST AID INSTRUCTIONS PRINTED ON THE LABEL OF THE MATERIAL CONTAINER AND INCLUDED IN THE MATERIAL SAFETY DATASHEET. REFER TO THE LOCAL SAFETY REGULATIONS. WEAR APPROPRIATE SAFETY EQUIPMENT (GLOVES, GOWNS, RESPIRATORS, ETC) WHEN HANDLING OR WORKING WITH CONSUMABLES MATERIALS. WHEN WORKING WITH INFLAMMABLES OR EXPLOSIVE MIXTURES KEEP PRODUCT AND ITS VAPORS AWAY FROM HEAT, SPARKS AND FLAMES.

WARNING

DURING APPLICATION AND UNTIL VAPORS HAVE DISSIPATED, AVOID USING SPARK PRODUCING ELECTRICAL EQUIPMENT SUCH AS SWITCHES, APPLIANCES, ETC. AVOID PROLONGED BREATHING OF VAPORS AND REPEATED CONTACT WITH SKIN.

NOTE

You can use equivalent alternative for the listed items.

Specification	Description	P/N	Q.ty
-	Tiedown strap (used only in Part I and II)	Commercial	1
-	Rubber gloves	Commercial	AR
MIL-PRF-680	Degreasing solvent	Commercial	AR
TT-N-95B, type II	Aliphatic naphtha	Commercial	AR
-	Isopropyl alcohol	Commercial	AR
Scotch brite	Abrasive pad (used only in Part II and III)	Commercial	AR
299-947-117, T. II or T. III, MIL-PRF-85285 Type I Class H or equivalent	Polyurethane enamel, clear	Commercial	AR
MIL-A-46106	Sealant, Dow Corning RTV-732, clear	Commercial	AR
-	Conformal coating, AR type (alternative to RTV-732 sealant)	Commercial	AR
-	Solder (used only in Part IV)	Commercial	AR
-	Sponge (used only in Part IV)	Commercial	AR
-	Flux (used only in Part IV)	Commercial	AR

Table 5 – Required Consumables

TOOLING

The following tools, fixtures and equipment are required for compliance with this Bulletin:

P/N	DESCRIPTION	TASK	SOURCE
-	Scissors/Cutter (used only in Part I and II)	Cutting	Commercial
-	Crosshead screwdriver	Disassembly and assembly	Commercial
-	Brush	Cleaning	Commercial
-	Spatula	Sealant application	Commercial

P/N	DESCRIPTION	TASK	SOURCE
-	Multimeter	Testing	Commercial
-	Permanent marker, white	Marking	Commercial
-	Vice/Fixture (used only in Part IV)	Soldering	Commercial
-	Solder sucker (used only in Part IV)	Soldering	Commercial
-	Soldering iron (used only in Part IV)	Soldering	Commercial

Table 6 – Required Tooling

WEIGHT AND BALANCE DATA

Weight and Balance are not affected.

ELECTRICAL LOAD DATA

Electrical load is not affected.

REFERENCES

N/A.

PUBLICATIONS AFFECTED

B505 H/C Maintenance Manual(s), model and Issue/Revision under BH scope.

NOTE

This Service Bulletin is incorporated into MAG Component Repair Manual 67-00-07 – 2nd Issue.

MSB-M207-003

Date: 06 December 2024
Rev.: **A** 02 September 2025

ACCOMPLISHMENT INSTRUCTIONS

Part I - Collective, Co-Pilot Stick Assembly (P/N M207-20M479-047 to M207-20M479-051)

DISASSEMBLY

1. Refer to Figure 1. Remove the three screws and the three nuts from the cover of the grip.
2. Remove the cover of the grip.

Figure 1 – Cover of the grip

3. Refer to Figure 2. Remove the screw internal to the grip and remove the plastic clamp from the wires.

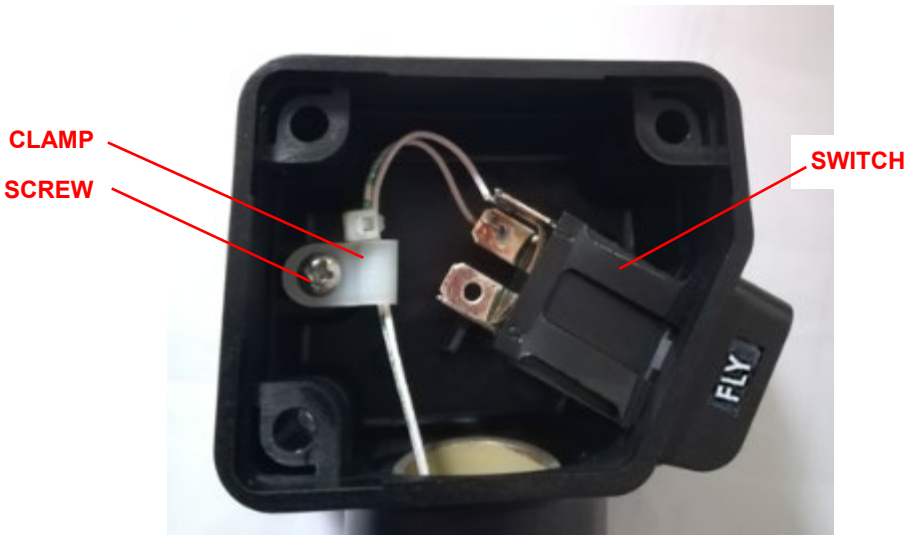

Figure 2 – Internal layout of the grip

4. Refer to Figure 3. Put the tiedown strap around the switch.

CAUTION

BE CAREFUL NOT TO DAMAGE THE SWITCH.

5. Lock the tiedown strap around the switch to compress the four tabs.

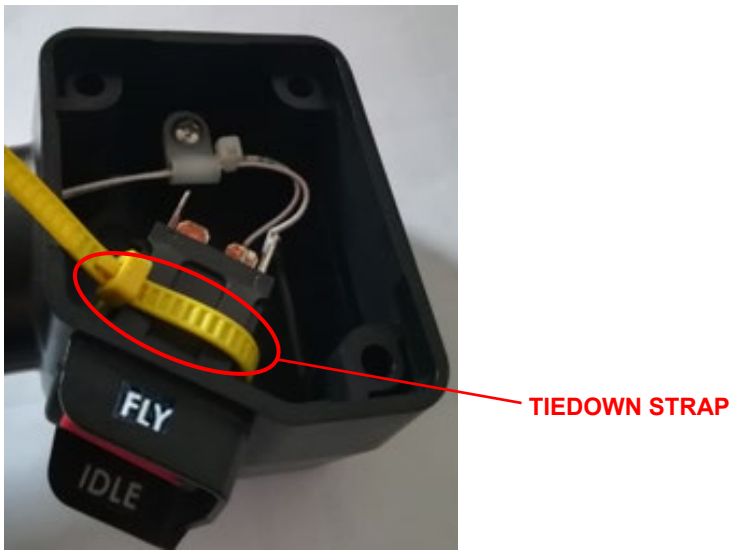

Figure 3 – Tiedown strap installation around the switch

6. Refer to Figure 4. Push the switch out of its seat.

Figure 4 – Switch removal from the seat

7. Refer to Figure 5. Cut and discard the tiedown strap.

Figure 5 – Tiedown strap removal from the switch

8. Remove the switch from its position in the grip to gain access to the contacts.

CAUTION

BE CAREFUL NOT TO DAMAGE THE WIRES AND THE CONNECTION BETWEEN THE WIRES AND THE SWITCH.

9. Refer to Figure 6 for the wiring diagram of the basic configuration of the co-pilot collective grip assembly. If the actual wiring diagram differs from Figure 6, record it. Make sure to identify all wires and each pin of all the switches inside the grip. This will help you during testing.

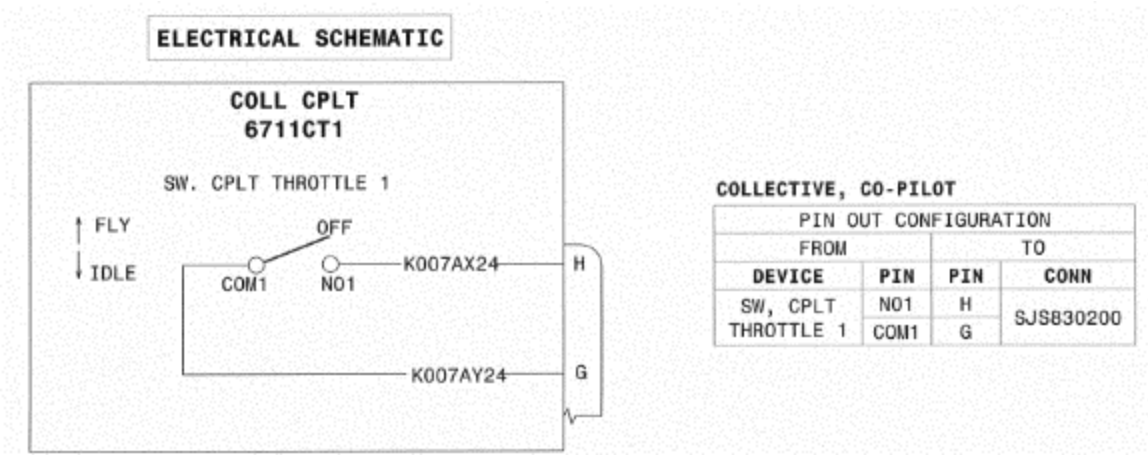

Figure 6 – Wiring diagram

10. Make sure that the wires are correctly soldered to the switch.

11. If the wires are not correctly soldered, do the procedure given in **Part IV**.

SEALANT APPLICATION

CAUTION

WEAR RUBBER GLOVES WHILE YOU CLEAN AND APPLY THE SEALANT.

CAUTION

BE CAREFUL NOT TO DAMAGE THE WIRES AND THE CONNECTION BETWEEN THE WIRES AND THE SWITCH.

12. Make sure that the substrate is clean and dry. Degrease any contaminants that could impair adhesion. Use isopropyl alcohol or aliphatic naphtha and scrub carefully but thoroughly with a brush.

CAUTION

DO NOT USE COMPRESSED AIR TO DRY THE PARTS.

13. Let the product dry.

CAUTION

MAKE SURE THAT YOU COVER ALL EXPOSED METALLIC SURFACES WITH SEALANT.

NOTE

On exposure to moisture, the freshly applied material will "skin-over". If necessary, use a suitable spatula with round edges. Application should be completed before this skin forms.

14. Refer to Figure 7. Apply a continuous layer of Sealant DOWSIL 732 RTV, clear color on both sides of the two soldered terminals (both on the switch). As an alternative, use conformal coating, AR type.

15. Let the adhesive cure. The adhesive/sealant will be tack-free in less than 45 minutes. In 24 hours (at room temperature and 50% relative humidity) the adhesive/sealant will cure to a depth of about 3 mm. Cure time is extended at lower humidity levels or when access to atmospheric moisture is restricted.

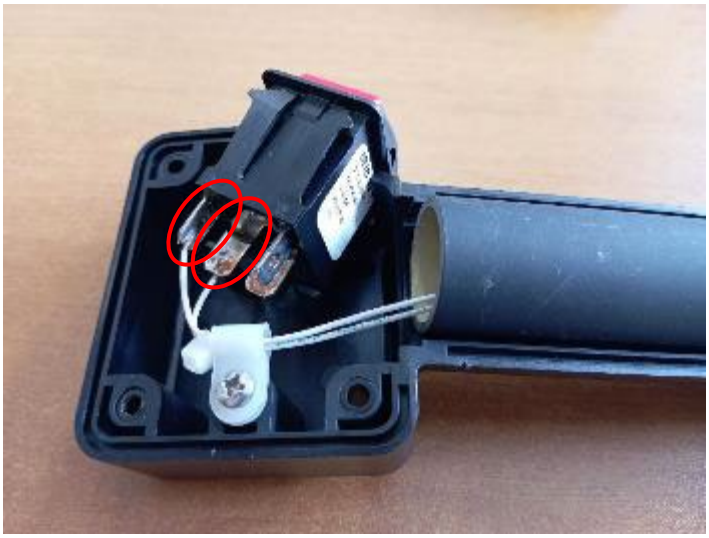

Figure 7 – Areas of sealant application

ASSEMBLY

16. Push the switch in its seat. Make sure that the contacts 1 and 3 face upwards as shown in Figure 8.

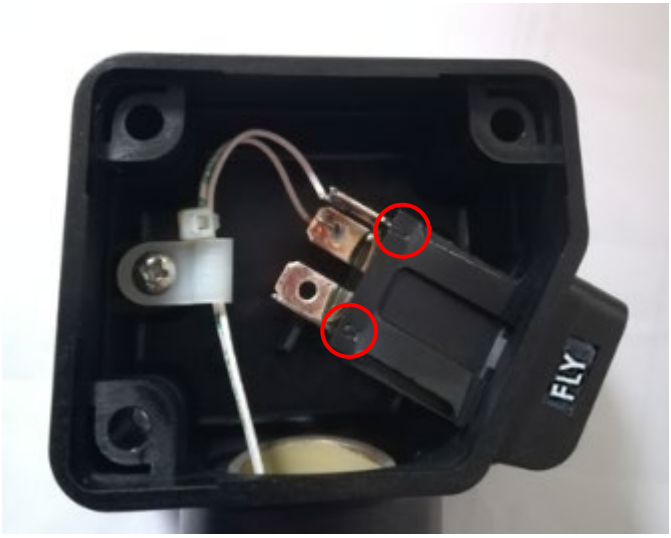

Figure 8 – Switch contact numbers

17. Refer to Figure 9. Make sure that the switch is correctly engaged in the two halves of the grip.

Figure 9 – Switch position

18. Refer to Figure 2. Put the wires in the plastic clamp and install it with the screw.
19. Tighten the screw with your hand.
20. Install the cover on the front half of the grip (with the FLY decal on it).
21. Install the three screws and the three nuts on the cover.
22. Tighten the three screws with your hand.

TESTING

23. Do a continuity test of the wiring with a multimeter. To do so, connect the multimeter with two paired pins at a time and operate the applicable switch. Refer to schematic on Figure 6 or the one that you took, if different.

UPDATE OF MARKING

24. Refer to Figure 10. Remove the decal in the lower rear area of the grip.

Figure 10 – Decal of the grip

25. Clean the residues of adhesive with degreasing solvent per MIL-PRF-680, aliphatic naphtha, isopropyl alcohol or equivalent.

26. Install the new decal “MGXM19761” in the area where you removed the decal.

27. Refer to Figure 11. Strikethrough with a white permanent ink marker or remove with an abrasive pad the last digits (-041) of the co-pilot collective tube assembly P/N M207-20M302-041.

28. Update the P/N with a white permanent ink marker close to the existing P/N. Mark as follows:

    a. Mark the last digits (-045) of the P/N M207-20M302-045.

    b. If you are reworking parts on-field, add FM after the co-pilot collective tube assembly P/N.

29. If you are updating parts installed on H/C, mark the helicopter S/N close to the co-pilot collective tube assembly P/N M207-20M302-045.

30. If you are updating parts in stock, contact BH PSE for further information.

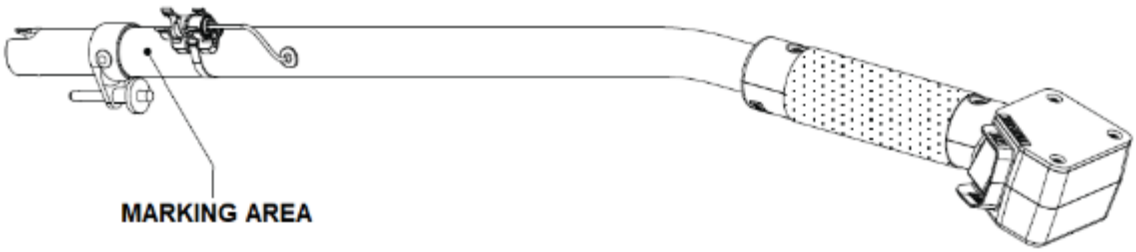

Figure 11 – Marking area - Tube

31. Refer to Figure 12. Strikethrough with a white permanent ink marker or remove with an abrasive pad the last digits (-047) of the co-pilot collective stick assembly P/N M207-20M479-047.

32. Update the P/N with a white permanent ink marker close to the existing P/N. Mark as follows:

    a. Mark the last digits (-051) of the P/N M207-20M479-051.

    b. If you are reworking parts on-field, add FM after the co-pilot collective stick assembly P/N.

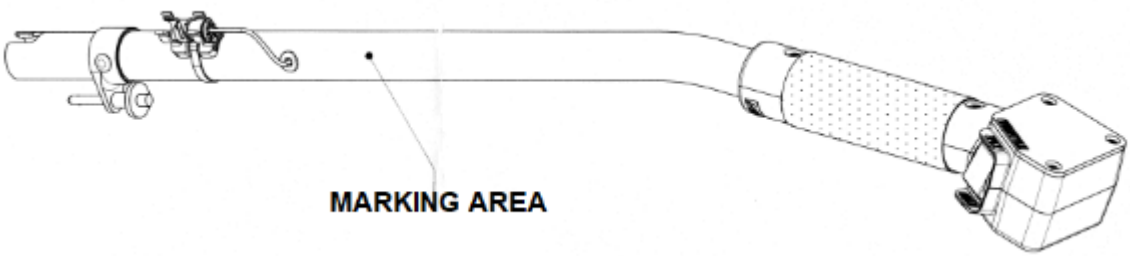

Figure 12 – Marking area – Stick assembly

33. Let the ink dry, then cover the all the marked areas with clear polyurethane lacquer. Let the lacquer dry.

Part II - Collective, Pilot Stick Assembly (P/N M207-20M478-051 or M207-20M478-053 to M207-20M478-055)

DISASSEMBLY

1. Refer to Figure 13. Remove the three screws and the three nuts from the cover of the grip.

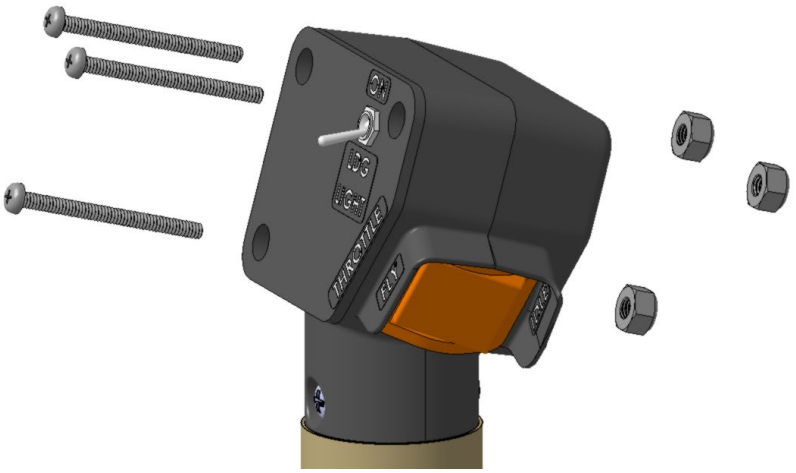

Figure 13 – Cover of the grip

CAUTION

BE CAREFUL NOT TO DAMAGE THE WIRES AND THE CONNECTION BETWEEN THE WIRES AND THE SWITCH 2.

2. Refer to Figure 14. Remove the cover of the grip with the switch 2.

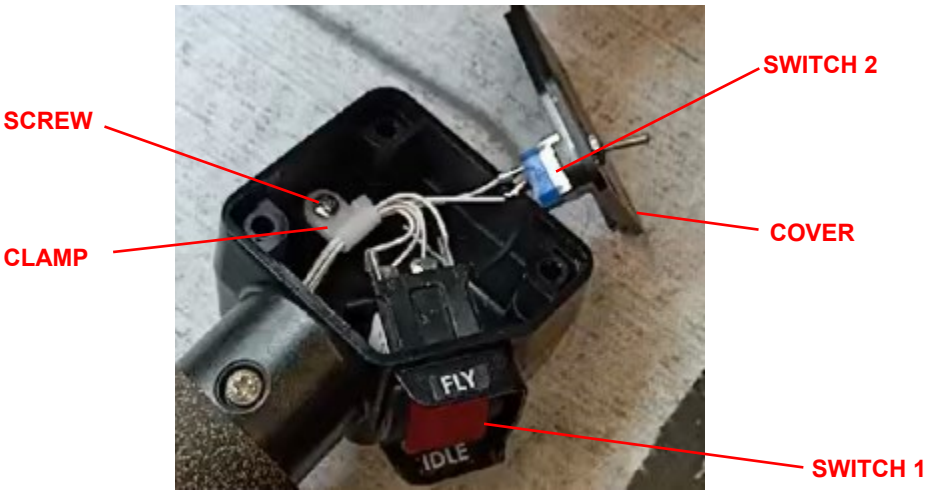

Figure 14 – Cover and the internal layout of the grip

3. Refer to Figure 14. Remove the screw internal to the grip and remove the plastic clamp from the wires.

4. Refer to Figure 15. Put the tiedown strap around the switch 1.

CAUTION

BE CAREFUL NOT TO DAMAGE THE SWITCH 1.

5. Lock the tiedown strap around the switch 1 to compress the four tabs.

Figure 15 – Tiedown strap installation around the switch 1

6. Refer to Figure 16. Push the switch 1 out of its seat.

Figure 16 – Switch 1 removal from the seat

7. Refer to Figure 17. Cut and discard the tiedown strap.

Figure 17 – Tiedown strap removal from the switch 1

8. Remove the switch 1 from its position in the grip to gain access to the contacts.

CAUTION

BE CAREFUL NOT TO DAMAGE THE WIRES AND THE CONNECTION BETWEEN THE WIRES AND THE SWITCH 1.

9. Refer to Figure 18 for the wiring diagram of the basic configuration of the pilot collective grip assembly. If the actual wiring diagram differs from Figure 18, record it. Make sure to identify all wires and each pin of all the switches inside the grip. This will help you during testing.

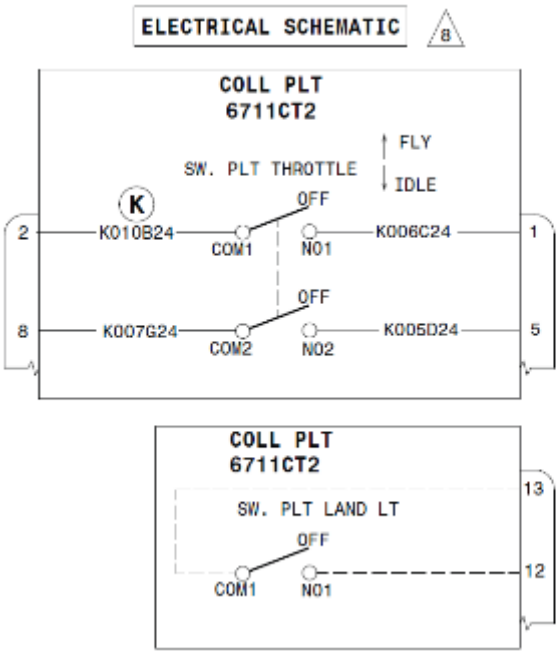

COLLECTIVE, PILOT

PIN OUT CONFIGURATION			
FROM		TO	
DEVICE	PIN	PIN	CONN
SW, PLT THROTTLE	NO1	1	D38999/26JB35PN
	COM1	2	
	NO2	5	
SW, PLT LAND LT	COM2	8	
	NO1	12	
	COM1	13	

Figure 18 – Wiring diagram

10. Make sure that the wires are correctly soldered on the two switches.

11. If the wires are not correctly soldered, do the procedure given in **Part IV**.

SEALANT APPLICATION

CAUTION

WEAR RUBBER GLOVES WHILE YOU CLEAN AND APPLY THE SEALANT.

CAUTION

BE CAREFUL NOT TO DAMAGE THE WIRES AND THE CONNECTION BETWEEN THE WIRES AND THE SWITCH.

12. Make sure that the substrate is clean and dry. Degrease any contaminants that could impair adhesion. Use isopropyl alcohol or aliphatic naphtha and scrub carefully but thoroughly with a brush.

CAUTION

DO NOT USE COMPRESSED AIR TO DRY THE PARTS.

13. Let the product dry.

CAUTION

MAKE SURE THAT YOU COVER ALL EXPOSED METALLIC SURFACES WITH SEALANT.

NOTE

On exposure to moisture, the freshly applied material will "skin-over". If necessary, use a suitable spatula with round edges. Application should be completed before this skin forms.

14. Refer to Figure 19. Apply a continuous layer of Sealant DOWSIL 732 RTV, clear color on both sides of the six soldered terminals (four on the switch 1 and two on the switch 2). As an alternative, use conformal coating, AR type.

15. Let the adhesive cure. The adhesive/sealant will be tack-free in less than 45 minutes. In 24 hours (at room temperature and 50% relative humidity) the adhesive/sealant will cure to a depth of about 3 mm. Cure time is extended at lower humidity levels or when access to atmospheric moisture is restricted.

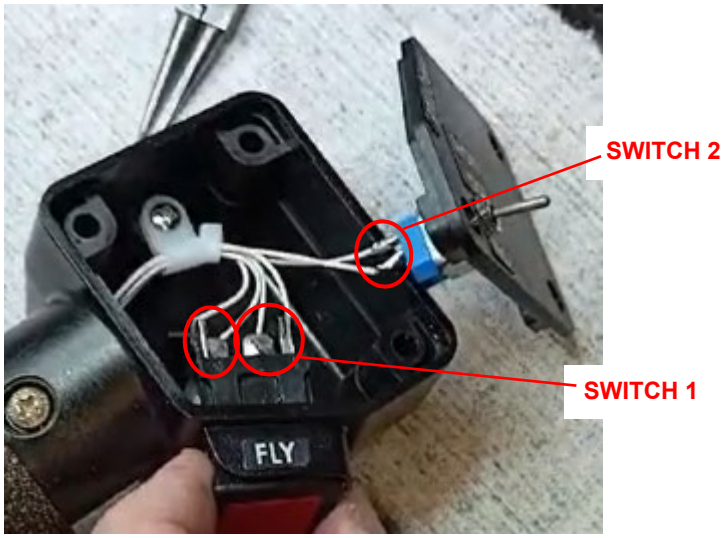

Figure 19 – Areas of sealant application

ASSEMBLY

16. Put the switch 1 in the position shown in Figure 20. Make sure that the contacts 1 and 3 face upwards.

Figure 20 – Switch 1 contact numbers

17. Refer to Figure 21. Make sure that the switch 1 is correctly engaged in the two halves of the grip.

Figure 21 – Switch 1 position

18. Refer to Figure 2. Put the wires in the plastic clamp and install it with the screw.

19. Tighten the screw with your hand.

CAUTION

BE CAREFUL NOT TO DAMAGE THE WIRES AND THE CONNECTION BETWEEN THE WIRES AND THE SWITCH 2.

20. Install the cover with the switch 2 on the grip.

21. Install the three screws and the three nuts on the cover.

22. Tighten the three screws with your hand.

23. Refer to Figure 22. Make sure that all the decals shown are installed on the grip. If some decals are not installed, do as follows:

    a. Clean the area with degreasing solvent per MIL-PRF-680, aliphatic naphtha, isopropyl alcohol or equivalent.

    b. Install the decal in its position.

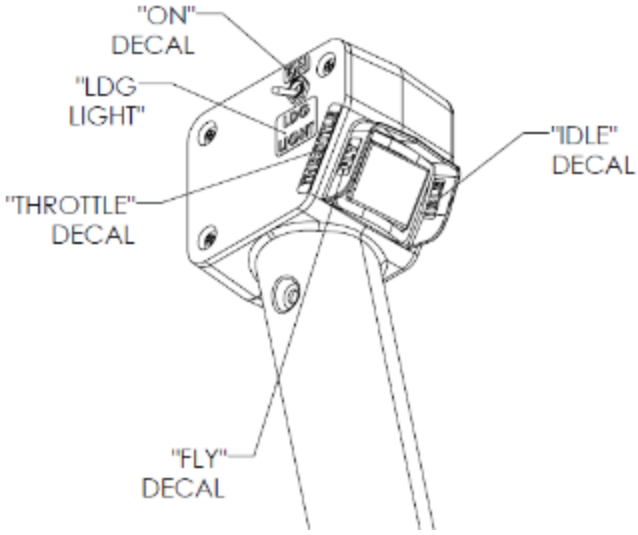

Figure 22 – Decals of the grip in the upper area

TESTING

24. Do a continuity test of the wiring with a multimeter. To do so, connect the multimeter with two paired pins at a time and operate the applicable switch. Refer to schematic on Figure 18 or the one that you took, if different.

UPDATE OF MARKING

25. Refer to Figure 23. Remove the decal in the lower rear area of the grip.

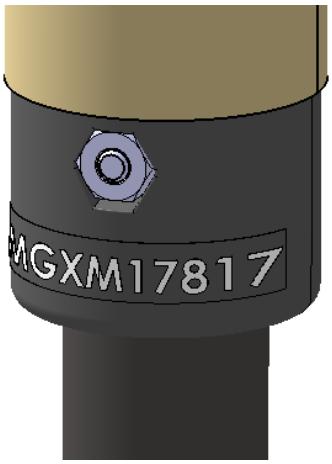

Figure 23 – Decal of the grip in the lower rear area

26. Clean the residues of adhesive with degreasing solvent per MIL-PRF-680, aliphatic naphtha, isopropyl alcohol or equivalent.

27. Install the new decal “MGXM19760” in the area where you removed the decal.

28. Refer to Figure 24. Strikethrough with a white permanent ink marker or remove with an abrasive pad the last digits (-051/-053) of the pilot collective stick assembly P/N M207-20M478-051/-053.

29. Update the P/N with a white permanent ink marker close to the existing P/N. Mark as follows:

    a. Mark the last digits (-055) of the P/N M207-20M478-055.

    b. If you are reworking parts on-field, add FM after the pilot collective stick assembly P/N.

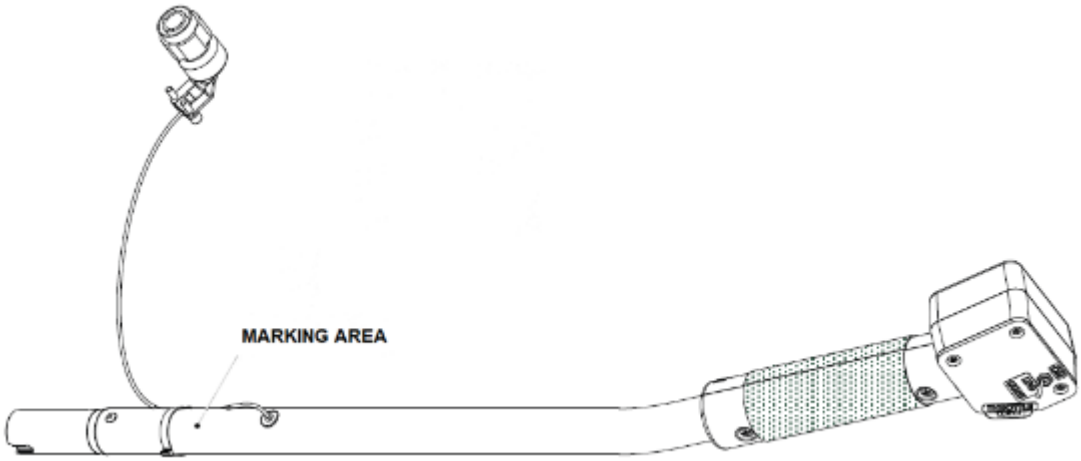

Figure 24 – Marking area

30. Let the ink dry, then cover the marked area with clear polyurethane lacquer. Let the lacquer dry.

Part III - Cyclic, Pilot Stick Assembly (P/N M207-20M476-045 to M207-20M476-049) and Cyclic, Co-Pilot Stick Assembly (P/N M207-20M477-045 to M207-20M477-049)

DISASSEMBLY

1. Refer to Figure 25. Remove the two screws and the two washers from the cyclic grip assy.

Figure 25 – Tube screws

CAUTION

DO NOT PULL THE GRIP WITH TOO MUCH FORCE. IT MAY CAUSE DAMAGE TO THE WIRES.

2. Refer to Figure 26. Pull the grip assembly out of the cyclic tube as shown.

Figure 26 – Removing the grip

3. Refer to Figure 27. Remove the three screws (1) from the cover (2) of the grip.
4. Remove the cover (2) of the grip with the related gasket (3, highlighted in orange).
5. Remove the upper body (4) of the grip.

Figure 27 – Removing screws

6. Refer to Figure 28. Remove the two screws and the two nuts from cyclic grip assy.

Figure 28 – Removing grip screws

7. Gently split the two halves of the grip.

Figure 29 – Junction of the grip

8. Refer to Figure 30 for the wiring diagram of the basic configuration of the cyclic grip assembly. If the actual wiring diagram differs from Figure 30, record it. Make sure to identify all wires and each pin of all the switches inside the grip. This will help you during testing.

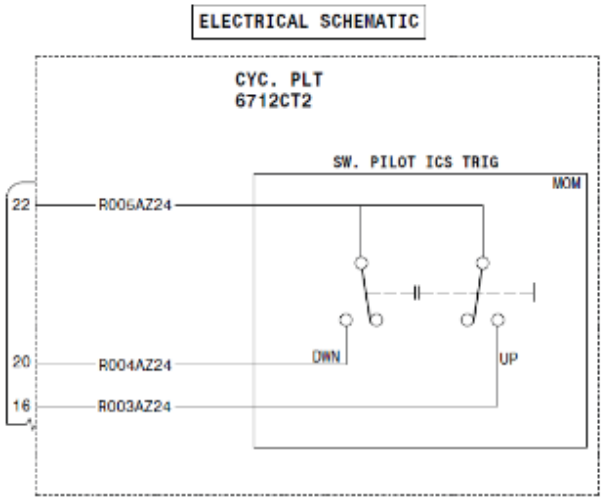

Wiring diagram of the pilot cyclic grip assy

CYCLIC, PILOT			
FROM		TO	
DEVICE	PIN	PIN	CONNECTOR
SW, PILOT ICS TRIG	COM	22	D38999/26JC35PN
	DWN	20	
	UP	16	

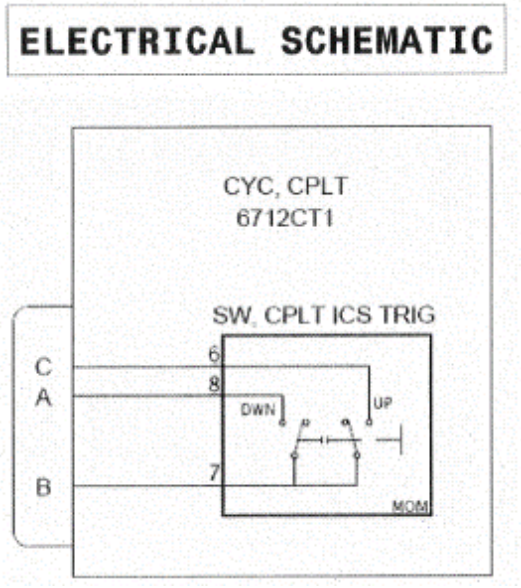

Wiring diagram of the co-pilot cyclic grip assy

CYCLIC, COPILOT			
FROM		TO	
DEVICE	PIN	PIN	CONNECTOR
SW, CPLT ICS TRIG	DWN	A	SJS830100
	COM	B	
	UP	C	

Figure 30 – Wiring diagram

CAUTION

BE CAREFUL NOT TO DAMAGE THE WIRES AND THE CONNECTION BETWEEN THE WIRES AND THE SWITCHES.

9. Refer to Figure 31. Remove the two switches from their position in the grip to gain access to the contacts. If necessary, remove the screw internal to the grip and remove the plastic clamp from the wires.

NOTE

The trigger may move out of its position when you remove the switches.

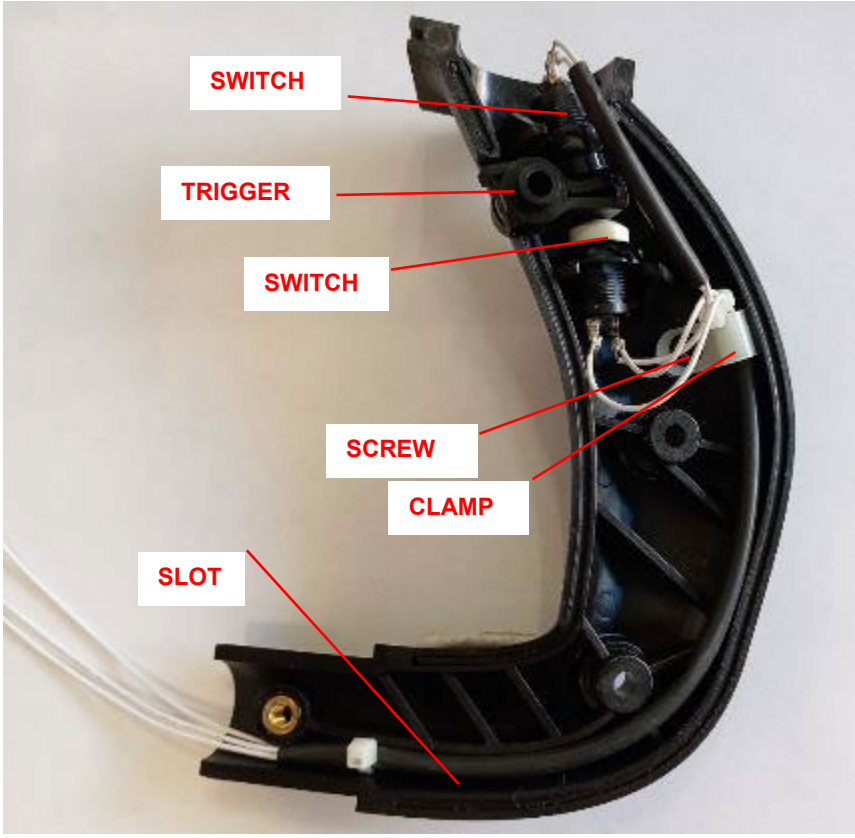

Figure 31 – Internal layout of the grip

10. Make sure that the wires are correctly soldered on the two switches.

11. If the wires are not correctly soldered, do the procedure given in **Part IV**.

SEALANT APPLICATION

CAUTION

WEAR RUBBER GLOVES WHILE YOU CLEAN AND APPLY THE SEALANT.

CAUTION

BE CAREFUL NOT TO DAMAGE THE WIRES AND THE CONNECTION BETWEEN THE WIRES AND THE SWITCH.

12. Make sure that the substrate is clean and dry. Degrease any contaminants that could impair adhesion. Use isopropyl alcohol or aliphatic naphtha and scrub carefully but thoroughly with a brush.

CAUTION

DO NOT USE COMPRESSED AIR TO DRY THE PARTS.

13. Let the product dry.

CAUTION

MAKE SURE THAT YOU COVER ALL EXPOSED METALLIC SURFACES WITH SEALANT.

NOTE

On exposure to moisture, the freshly applied material will "skin-over". If necessary, use a suitable spatula with round edges. Application should be completed before this skin forms.

14. Refer to Figure 32. Apply a continuous layer of Sealant DOWSIL 732 RTV, clear color on both sides of the four soldered terminals (two on the white switch and two on the black switch). As an alternative, use conformal coating, AR type.

15. Let the adhesive cure. The adhesive/sealant will be tack-free in less than 45 minutes. In 24 hours (at room temperature and 50% relative humidity) the adhesive/sealant will cure to a depth of about 3 mm. Cure time is extended at lower humidity levels or when access to atmospheric moisture is restricted.

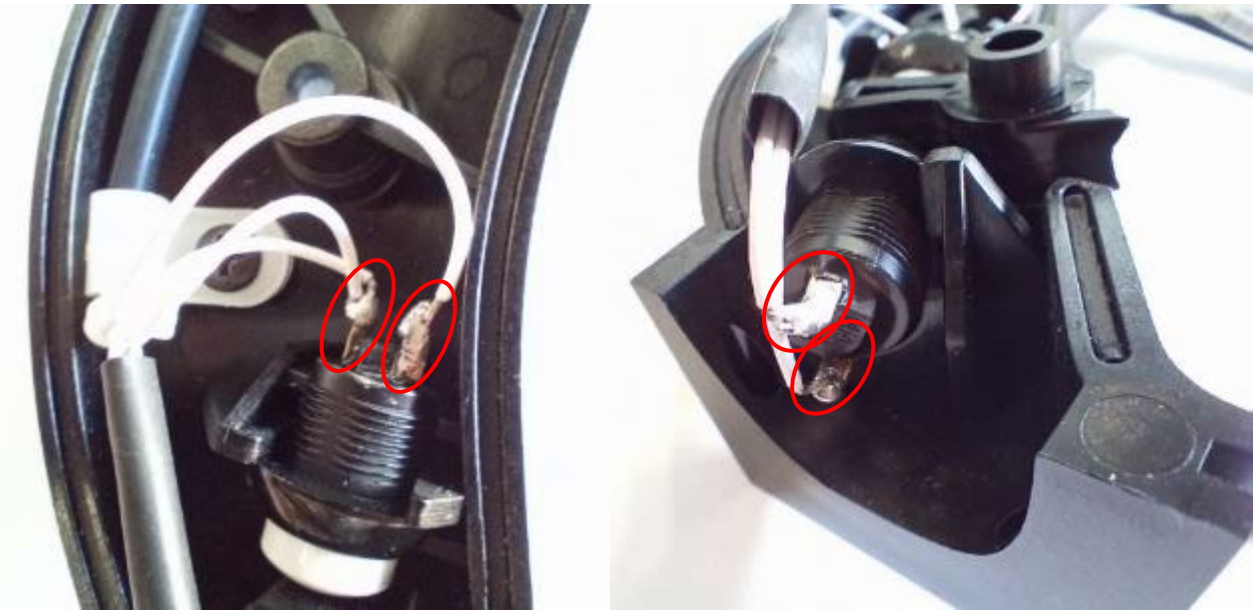

Figure 32 – Areas of sealant application

ASSEMBLY

16. Refer to Figure 31. If previously removed, put the wires in the plastic clamp and install it with the screw.

17. Tighten the screw with your hand.

18. Put the switches and the triggers in the positions shown in Figure 31. Make sure that the white switch is on the lower part and the black one is on the upper part of the grip. Make sure that the triggers are oriented as shown. Use the lower slot for routing the wire away from the holes for the screws.

19. Refer to Figure 33. Make sure that the two switches are correctly engaged in the half of the grip.

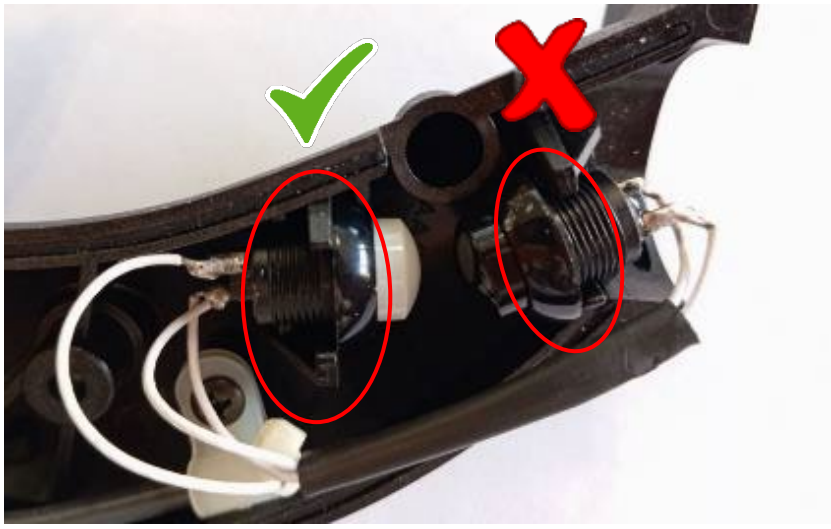

Figure 33 – Switches position (trigger removed for clarity)

CAUTION

MAKE SURE THAT YOU DO NOT PINCH THE WIRE WHILE YOU INSTALL THE HALF OF THE GRIP.

20. Refer to Figure 29. Install the left half of the grip on the right half (with the VC/RADIO decal on it) of the grip.

CAUTION

THE LONGER SCREW GOES IN THE UPPER HOLE OF THE GRIP.

21. Refer to Figure 28. Install the two screws and the two nuts on the cyclic grip assy.
22. Tighten the two screws with your hand.
23. Refer to Figure 27. Install the upper body (4) of the grip.
24. Install the cover (2) of the grip with the related gasket (3, highlighted in orange).
25. Install the three screws (1) on the cover (3) of the grip.
26. Tighten the three screws with your hand.
27. Refer to Figure 25. Install the grip assembly in the cyclic tube as shown.
28. Install the two screws and the two washers.
29. Torque the two screws to 1.0 thru 1.3 Nm (8.85 thru 11.5 lbf in).

TESTING

30. Do a continuity test of the wiring with a multimeter. To do so, connect the multimeter with two paired pins at a time and operate the applicable switch. Refer to schematic on Figure 30 or the one that you took, if different.

UPDATE OF MARKING

31. Refer to Figure 34. Remove the decal in the lower area of the grip.

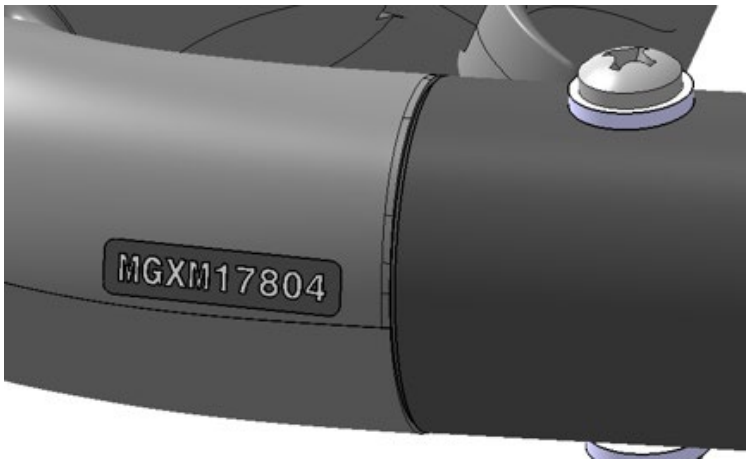

Figure 34 – Decal of the grip

32. Clean the residues of adhesive with degreasing solvent per MIL-PRF-680, aliphatic naphtha, isopropyl alcohol or equivalent.

33. Install the new decal “MGXM19758” in the area where you removed the decal.

34. If you are updating the Pilot cyclic stick assembly, do as follows:

    a. Refer to Figure 35. Strikethrough with a white permanent ink marker or remove with an abrasive pad the last digits (-045) of the Pilot cyclic stick assembly P/N M207-20M476-045.

    b. Update the P/N with a white permanent ink marker close to the existing P/N. Mark as follows:

    - Mark the last digits (-049) of the P/N M207-20M476-049.
    - If you are reworking parts on-field, add FM after the cyclic stick assembly P/N.

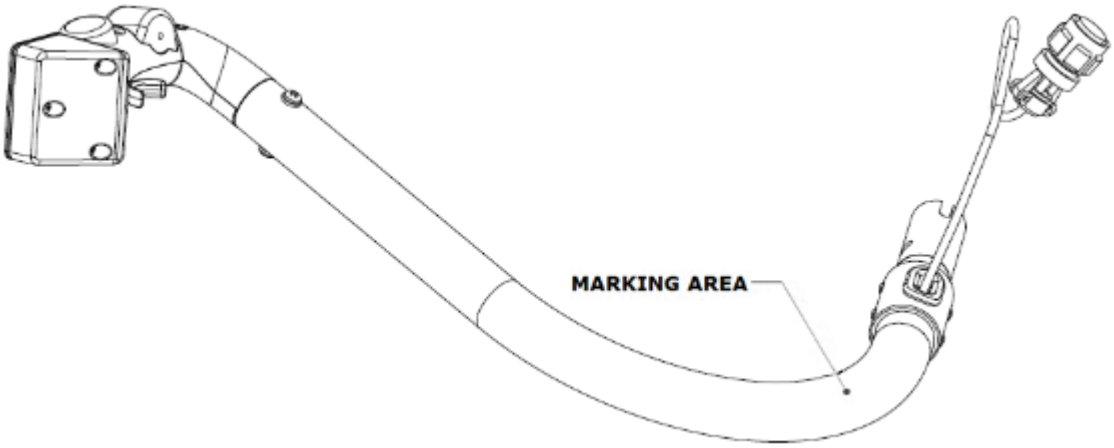

Figure 35 – Marking area of the pilot cyclic grip & stick assembly

35. If you are updating the Co-pilot cyclic stick assembly, do as follows:

a. Refer to Figure 36. Strikethrough with a permanent ink marker or remove with an abrasive pad the last digits (-045) of the Co-pilot cyclic stick assembly P/N M207-20M477-045.

b. Update the P/N with a white permanent ink marker close to the existing P/N. Mark as follows:

- Mark the last digits (-049) of the P/N M207-20M477-049.
- If you are reworking parts on-field, add FM after the cyclic stick assembly P/N.

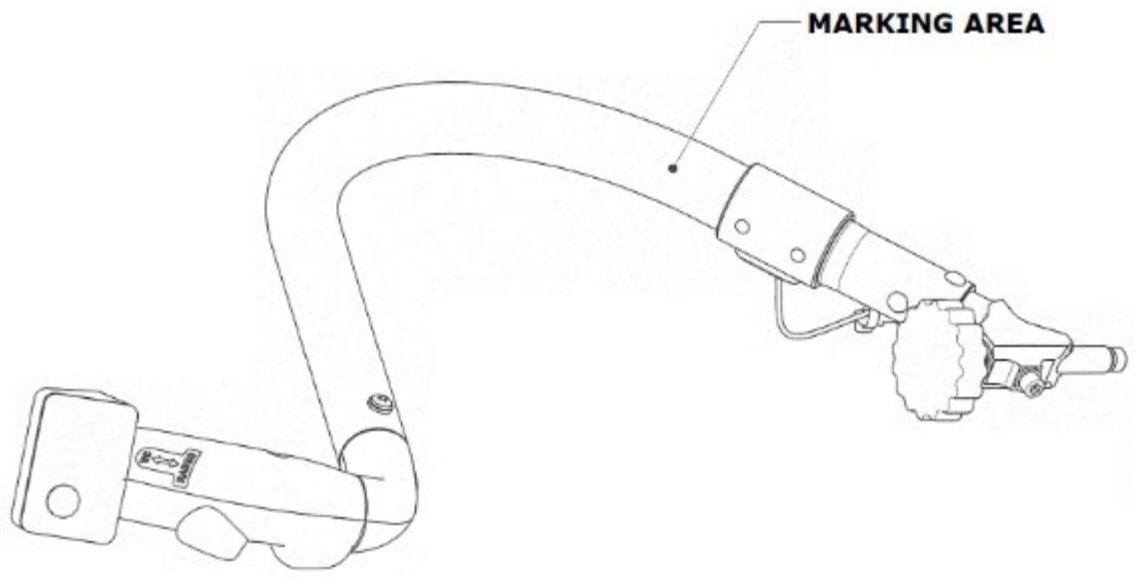

Figure 36 – Marking area of the co-pilot cyclic grip & stick assembly

36. Let the ink dry, then cover the marked area with clear polyurethane lacquer. Let the lacquer dry.

Part IV - Rework Procedure of the Solder Joints

NOTE

The procedure shown in Part IV refers to the switch 1 of the pilot collective stick assembly (refer to Figure 14). The same procedure is applicable to all the other switches of the collective and cyclic grips.

1. Turn on soldering iron.
2. Place unit in vice or fixture.

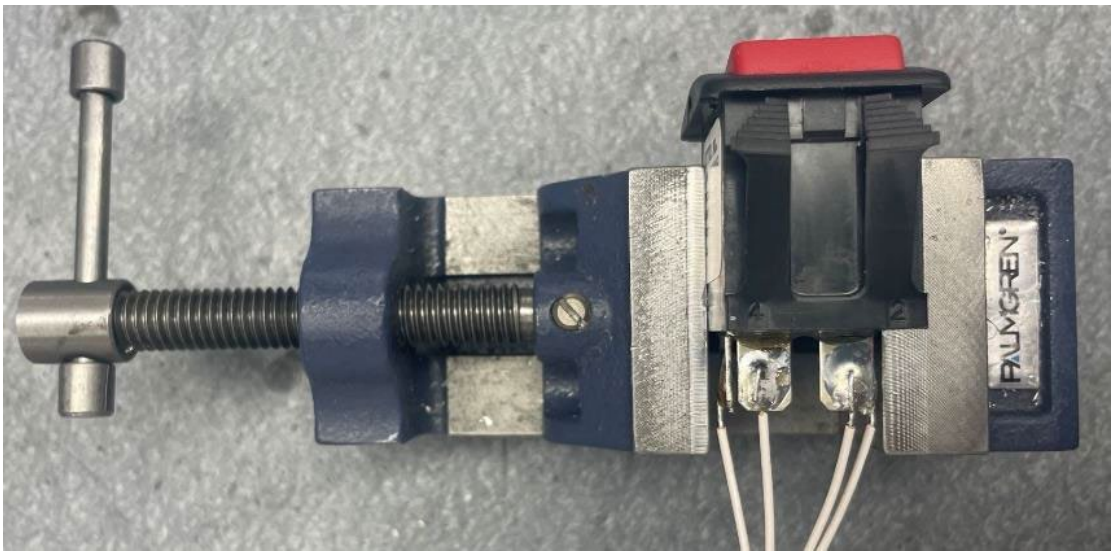

Figure 37 – Locking unit in a vice

3. Clean solder tip using sponge.

Figure 38 – Cleaning solder tip

4. Add solder to solder tip and heat solder joint to melt solder.

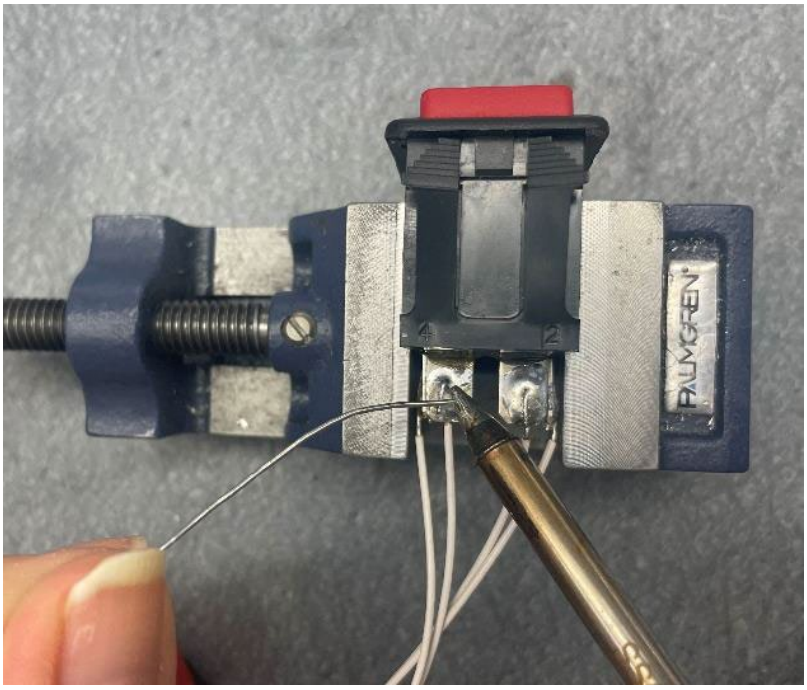

Figure 39 – Melting solder

5. Remove wire from solder joint while solder is still wet.

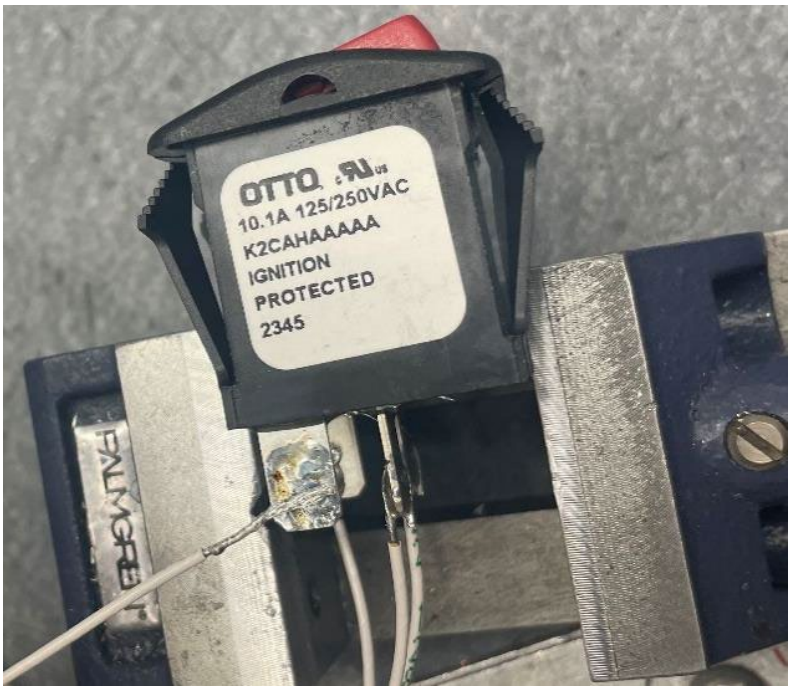

Figure 40 – Removing wire

6. Clean solder tip using sponge.
7. Add solder to solder tip and heat solder joint to melt solder.

8. Use solder sucker to remove solder from terminal while solder is melted.

Figure 41 – Removing solder from terminal

CAUTION

STRIP THE MINIMUM NECESSARY LENGTH OF THE WIRE.

9. Strip the wire to proper length, add flux, and re-tin.
10. Bend tinned lead into a letter “J” and solder wire to the terminal.

Part V - Collective, Co-Pilot Stick Assembly (P/N M207-20M479-043)

1. Do step 1 thru step 23 of the procedure given in **Part I** to rework the co-pilot collective stick assembly.
2. Do step 27 thru step 30 of the procedure given in **Part I** to update the co-pilot collective tube assembly P/N.
3. Refer to Figure 12. Update the co-pilot collective stick assembly P/N with a white permanent ink marker close to the existing P/N. If you are reworking parts on-field, add FM after the co-pilot collective stick assembly P/N.
4. Let the ink dry, then cover the all the marked areas with clear polyurethane lacquer. Let the lacquer dry.

Part VI - Cyclic, Pilot Stick Assembly (P/N M207-20M476-041)

1. Do step 1 thru step 30 of the procedure given in **Part III** to rework the pilot cyclic stick assembly with the following differences:

   a. Step 1, read: “Refer to Figure 25. Remove the two screws from the cyclic grip assy.”

   b. Step 20, read “Refer to Figure 29 (note that VC/RADIO decal position may not be representative of real position). Install the left half of the grip (looking forward when installed on H/C) on the right half of the grip.”

   c. Step 28, read: “Install the two screws.”

2. Refer to Figure 35. Update the pilot cyclic stick assembly P/N with a white permanent ink marker close to the existing P/N. If you are reworking parts on-field, add FM after the cyclic stick assembly P/N.

3. Let the ink dry, then cover the all the marked areas with clear polyurethane lacquer. Let the lacquer dry.

Part VII – Cyclic, Co-Pilot Stick Assembly (P/N M207-20M477-043)

1. Do step 1 thru step 30 of the procedure given in **Part III** to rework the co-pilot cyclic stick assembly with the following differences:

    a. Step 20, read “Refer to Figure 29 (note that VC/RADIO decal position may not be representative of real position). Install the left half of the grip (looking forward when installed on H/C) on the right half of the grip.”

2. Refer to Figure 36. Update the co-pilot cyclic stick assembly P/N with a white permanent ink marker close to the existing P/N. If you are reworking parts on-field, add FM after the cyclic stick assembly P/N.

3. Let the ink dry, then cover the all the marked areas with clear polyurethane lacquer. Let the lacquer dry.