A Textron Company

ALERT SERVICE BULLETIN

505-24-38
PSL # 2451
24 January 2024
Revision A, 7 May 2025

MODEL AFFECTED: **505**

SUBJECT: **VERTICAL STABILIZER ASSEMBLY, TOP END CAP ASSEMBLY, INSPECTION AND REPLACEMENT OF.**

HELICOPTERS AFFECTED: **Serial numbers 65011 through 65490, 65492 through 65498, 65500 through 65505, 65507, 65509 through 65512, 65514 through 65545, 65548 through 65555, 65559, 65562, 65563 through 65568, 65570 through 65576, 65578 through 65580, 65582, 65584, 65585, 65587, 65593, 65594, 65597, 65599, 65603, 65611, 65614, and 65616.**

[Serial numbers 65491, 65499, 65506, 65508, 65513, 65546, 65547, 65556 through 65558, 65560, 65561, 65569, 65577, 65581, 65583, 65586, 65588 through 65592, 65595, 65596, 65598, 65600, 65601, 65602, 65604 through 65610, 65612, 65613, 65615, 65617 through 65629, and 65630 and subsequent will have the intent of **PART IV** this bulletin accomplished prior to delivery.]

COMPLIANCE: **PART I** - Within 10 flight hours following the release date of this bulletin.

PART II – **DELETED**

PART III - Every 25 flight hours following the accomplishment of **PART I** or **PART II** of this bulletin.

COMPLIANCE: **PART IV** – Prior to next flight as required by **PART I** or **PART III,** or within 12 months following the release date of **Revision A** of this bulletin.

DESCRIPTION:

Bell has received reports of the top end cap assemblies of the vertical stabilizer assembly found cracked, and in two cases, departure of the NAV/VOR/GS antenna and tuning weight from the helicopters while in flight.
PART I of this Alert Service Bulletin (ASB) requires a one-time detailed inspection of the top end cap assembly SLS-030-701-125. **PART II** provides instructions for the replacement of the top end cap assembly if found cracked. **PART III** of this bulletin provides the instructions for a recurring detailed inspection of the top end cap assembly SLS-030-701-125.
Revision A of this ASB deletes **PART II** and introduces **PART IV** which provides instructions for the installation of a new vertical stabilizer assembly one piece machined top end cap assembly SLS-704-701-101. Production implementation of the new design will use top end cap assembly SLS-030-701-149.
The accomplishment of **PART IV** of this bulletin will be the terminating action of the recurring inspection requirements of **PART III** of this bulletin.

APPROVAL:

The engineering design aspects of this bulletin are Transport Canada Civil Aviation (TCCA) approved.

CONTACT INFO:

For any questions regarding this bulletin, please contact:

Bell Product Support Engineering
Tel: 1-450-437-2862 / 1-800-363-8023 / productsupport@bellflight.com

MANPOWER:

Approximately 2.0 man-hours are required to complete the **PART I** of this bulletin.
PART II deleted.
Approximately 1.0 man-hour is required to accomplish **PART III** of this bulletin.
Approximately 6.0 man-hours are required to accomplish **PART IV** of this bulletin.
These estimates are based on hands-on time and may vary with personnel and facilities available.

WARRANTY:

Owners / Operators of Bell Helicopters who comply with the instructions in this bulletin will be eligible to receive replacement part and labor as applicable, listed in the bulletin. The www.mybell.com portal allocates specific warranty entitlement for an aircraft by serial number. The Product Service Letter (PSL) number which will be listed below the bulletin number on the introduction page. This is going to be a required field when submitting a claim on the Bulletins Tab for replacement parts, labor, and/or freight. If you receive an ASB or TB that does not have a PSL number, then there is no warranty entitlement for that bulletin.

Labor entitlement: NO

To receive parts, labor, under warranty:

- Comply with the instructions for **PART IV** contained in this Bulletin no later than12 months from date of release of Revision A of this Bulletin.
- If there is a PSL number identified in the bulletin you will be required to enter this PSL number which will validate warranty entitlement for the selected aircraft. Please ensure that you use the Bulletin tab on the warranty section on www.mybell.com portal to file your claim.

NOTE: A user guide on how to submit a claim can be found here: How to Submit PSL Bulletin Claims.

MATERIAL:

Required Material:
The following material is required for the accomplishment of this bulletin and may be obtained through your Bell Supply Center.

Part Number	Nomenclature	Qty (Note)
SLS-704-701-001	TOP END CAP RETROFIT KIT	1 (1)
SLS-030-701-155	DOUBLER	2 (2)
SLS-030-701-157	DOUBLER	2 (2)
SLS-030-701-159	SHIM	2 (2)
SLS-704-701-101	TOP END CAP ASSEMBLY	1 (2)
120-098-11B36	SHIM	4 (2)
MS27039-1-37	SCREW	2 (2)
NAS620A10	WASHER	4 (2)
NAS7103-20	BOLT	2 (2)
NAS9301B-4-01	RIVET	2 (2)

Part Number	Nomenclature	Qty (Note)
NAS9301B-4-02	RIVET	26 (2)
NAS9301B-5-02	RIVET	18 (2,3)
NAS9302B-5-03	RIVET	4 (2)
NAS9304B-4-02	RIVET	18 (2,3)
NAS9304B-5-02	RIVET	14 (2,3)
NAS9926-3L	NUT	2 (2)

NOTES

1. Required for accomplishment of **PART IV** of this bulletin.
2. Parts/components included in top end cap retrofit kit SLS-704-701-001.
3. Only required if damage is noted around existing fastener holes following removal of top end cap assembly SLS-030-701-125.

Consumable Material:

The following material is required to accomplish this bulletin, but may not require ordering, depending on the operator's consumable material stock levels. This material may be obtained through your Bell Supply Center.

Part Number	Nomenclature	Qty (Note)	Reference *
COMMERCIAL	POLYURETHANE ENAMEL (CLEAR)	1 GAL (1,3)	C-233
COMMERCIAL	ORGANIC FINISH (PAINT)	1 GAL (1,3)	C-245
2010-12481-01	SEALANT (MIL-PRF-81733)	1 PT (1,4)	C-251
2000-01022-00	ADHESIVE	1 PT (1, 3)	C-317
2100-06673-00	ISOPROPRYL ALCOHOL	1 GAL (1,4,5)	C-385
2000-00713-00	TAPE	1 ROLL (1,2)	C-454

* C-XXX numbers refer to the consumables list in the BHT-ALL-SPM, Standard Practices Manual.

NOTES:

1. Quantity indicated is the format that the product is delivered in. Actual quantity required to accomplish the instructions in this bulletin may be less than what has been delivered.
2. Required for accomplishment of **PART I** of this bulletin.
3. Required for accomplishment of **PART IV** of this bulletin.
4. Required for accomplishment of **PART I** and **IV** of this bulletin.
5. Toluene 2110-06227-00 (C-306) or Ethyl Alcohol (C-339) can be used as an alternate.

SPECIAL TOOLS:

None required.

WEIGHT AND BALANCE:

Not affected.

ELECTRICAL LOAD DATA:

Not affected.

REFERENCES:

BHT-ALL-SPM, Standard Practices Manual, Chapter 4.
BHT-ALL-SRM, Structural Repair Manual, Chapter 3.
505-MM, Maintenance Manual, Chapters 33 and 34.
BHT-ELEC-SPM, Electrical Standard Practice Manual, Chapter 8.
General Information Letter GEN-22-154

PUBLICATIONS AFFECTED:

None affected.

ACCOMPLISHMENT INSTRUCTIONS:

-NOTE-

If **PART I** was accomplished following the initial release of this bulletin it does not need to be accomplished again as part of **Revision A** of this bulletin.

PART I – One-time detailed inspection of the vertical stabilizer assembly, top end cap assembly.

1. Prepare the helicopter for maintenance.

-NOTE-

Helicopters serial number 65011 through 65169 have been delivered with five tuning weight washers SLS-030-701-139 and one tuning weight SLS-030-701-137 installed. Serial numbers 65170 and subsequent will have one tuning weight SLS-030-701-141 installed (Figures 1 and 2).

2. Remove the NAV/VOR/GS antenna and tuning weight(s) (DMC-505-A-34-52-02-00A-520A-A).

3. Secure the NAV/VOR/GS antenna coaxial cable so that it does not fall into the vertical stabilizer assembly.

4. Remove any residual sealant (C-251) that may be present on the top end cap and tuning weight.

5. Using isopropyl alcohol (C-385) clean the surface of the top end cap assembly and allow to dry.

6. Perform a detailed inspection for any cracks of the top end cap assembly in area indicated (Figure 3).

   a. If no cracks are found, go to step 7.

   b. If a crack is found, replacement of the cracked top end cap assembly, by accomplishment of **PART IV**, is required to be accomplished prior to next flight. Go to step 13.

-NOTE-

Steps 7 through 11 will only need to be performed once. These steps create a form-in-place gasket for ease of removal/installation of the tuning weight for accomplishment of **PART III**.

-NOTE-

Ensure that the full surface of the top end cap assembly that is exposed is covered with the tape (C-454) preventing sealant (C-251) squeeze-out sticking to the surface. Tape may also be extended to the side surfaces of the top end cap assembly.

7. Apply tape (C-454) to the top end cap assembly in the area indicated (Figure 4).

-NOTE-

Lightly abrade the glossy topcoat finish on the surface of the tuning weight(s) where the sealant (C-251) is to be applied. This will provide improved adhesion of the sealant. The quantity of sealant applied shall be sufficient to meet the thickness requirements of step 9.

8. Apply sealant (C-251) to the mating surface of the tuning weight(s) that will be seated against the top end cap assembly.

-NOTE-

For the next step, the final thickness of sealant (C-251) applied shall be 0.020 to 0.025 inch (0.508 to 0.635 mm) thick.

9. Install the tuning weight(s) to the surface of the top end cap assembly. Apply sufficient torque to the retaining screws (2, Figure 1 and 2) until sealant (C-251) squeeze-out occurs between the top end cap assembly and the tuning weight. Allow the sealant to cure.

10. Once the sealant (C-251) has cured, remove the tuning weight(s).

11. Remove the tape (C-454) from the top end cap assembly.

-NOTE-

The application of sealant in the Maintenance Manual procedure in the following step is to be omitted.

12. Install the NAV/VOR/GS antenna and tuning weight(s) (DMC-505-A-34-52-02-00A-720A-A).

13. Make an entry in the helicopter logbook and historical service records indicating compliance with **PART I** of this Alert Service Bulletin.

PART II – DELETED

PART III – Recurring detailed inspection of the vertical stabilizer, top end cap assembly SLS-030-701-125.

1. Prepare the helicopter for maintenance.

2. Remove the NAV/VOR/GS antenna and tuning weight(s) (DMC-505-A-34-52-02-00A-520A-A).

3. Secure the NAV/VOR/GS antenna coaxial cable so that it does not fall into the vertical stabilizer assembly.

4. Perform a detailed inspection for any cracks of the top end cap assembly in area indicated (Figure 3).

   a. If no cracks are found, go to step 5.

   b. If a crack is found, replacement of the cracked top end cap assembly, by accomplishment of **PART IV**, is required to be accomplished prior to next flight. Go to step 6.

-NOTE-

The application of sealant in the Maintenance Manual procedure in the following step is to be omitted.

5. Install the NAV/VOR/GS antenna and tuning weight(s) (DMC-505-A-34-52-02-00A-720A-A).

6. Make an entry in the helicopter logbook and historical service records indicating compliance with **PART III** of this Alert Service Bulletin.

PART IV – Installation of retrofit kit SLS-704-701-001.

1. Prepare the helicopter for maintenance.

1. If not already accomplished, remove NAV/VOR/GS antenna and tuning weight(s) (DMC-505-A-34-52-02-00A-520A-A). Retain tuning weights for steps below.

2. If not already accomplished, remove anti-collision light assembly, including the adapter plate (DMC-505-A-33-43-01-00A-520A-A).

3. Remove sealant from around the top end cap assembly (3, Figure 5).

4. Remove the rivets (1 and 2) holding the top end cap assembly (3) to the vertical stabilizer assembly.

-NOTE-

Secure the anti-collision light cable assembly and the NAV/VOR/GS antenna coaxial cable assembly to ensure they do not fall into the vertical stabilizer assembly.

5. Remove the top end cap assembly (3) and discard.

6. Remove any residual sealant (C-251) that may be present on the vertical stabilizer assembly.

7. Using isopropyl alcohol (C-385) clean the external and internal surfaces of the top of the vertical stabilizer and allow to dry.

8. Using a 10X magnifying glass, inspect rivet holes of the vertical stabilizer assembly for signs of damage or cracking.

   a. If there is no damage, go to step 9.

b. If there is damage or cracks noted, mark location(s) as oversized rivets will be required in later steps for the installation of the new top end cap assembly (1, Figure 7). Go to step 9.

-NOTE-

There are three pilot holes in the top of the end cap assembly (on each side) that should align with existing holes in the vertical stabilizer skins. Use Clecos to hold the top end cap assembly in position while marking remaining locations of existing rivet holes of the vertical stabilizer.

9. Position the top end cap assembly (1, Figure 8) on the vertical stabilizer (2).

10. Using a hole finder, mark locations of remaining rivet holes on the top end cap assembly (1).

11. Drill pilot holes 0.098 to 0.102 inch (0.249 to 0.251 mm) in locations marked on top end cap assembly (1) from previous step.

    a. If some holes are slightly offset, oversized rivets may be used for final installation. Identify which holes will require oversized rivets.

    b. It is permissible to use oversized rivets NAS9301B-5, NAS9304B-4, or NAS9304B-5 as required. Minimum edge distance of 1.2D with forward and aft edge of skins and 1.5D with upper edge of skins is acceptable.

12. Drill **new** pilot holes 0.098 to 0.102 inch (0.249 to 0.251 mm) through vertical stabilizer skins (each side) in locations identified on top end cap assembly (Figure 8).

-NOTE-

As there are variances in the contour of the vertical stabilizer skins, peelable shims may be required to fill gaps.

13. Using a feeler gauge, verify if shimming between the top end cap assembly and the vertical stabilizer skin is required. Gaps of less than 0.003 inch (0.076 mm) are allowed without requiring shims. A maximum shim thickness of 0.030 inch (0.762 mm) is allowed.

14. Peel and trim peelable shims (120-098-11B36) as required.

15. Remove top end cap assembly (2).

-NOTE-

The clamping pressure must be applied carefully to ensure firm contact but avoid excessive sealant squeeze-out.

16. Apply sealant (C-251) to faying surface of the peelable shim(s). Install peelable shims (120-098-11B36) to the internal surface of the top end cap assembly (2) in locations identified. While sealant is still wet, apply even clamping pressure using clamps (or equivalent). Fillet seal peelable shims using sealant (C-251). Allow sufficient time for sealant to cure.

17. Apply sealant (C-251) to faying surface of shim (2, Figure 11) and bond in position on the **right** inside of top end cap assembly (3) in position identified. **Do not** apply sealant to the faying surface, only fillet seal the shim (1) using sealant (C-251) on the **left** inside of the top end cap assembly (3) in position identified. Allow sufficient time for sealant to cure.

    a. Once sealant is cured, drill pilot holes 0.098 to 0.102 inch (0.249 to 0.251 mm) through the shims (1 and 2) using existing pilot holes of top end cap assembly (3).

    b. Verify electrical bonding (Class L) of top end cap (3) to shim (1). Maximum resistance not to exceed 10 milliohms (BHT-ELEC-SPM, Chapter 8).

18. Remove organic finish from the left side of the vertical stabilizer outer skin in area indicated (Figure 10).

19. Remove excessive sealant and adhesive from internal surfaces of vertical stabilizer assembly.

20. Using isopropyl alcohol (C-385) clean the internal surfaces of the top of the vertical stabilizer assembly (3, Figure 9) and doublers (1 and 2) and allow to dry.

21. Lightly abrade the internal surfaces of the vertical stabilizer inner skins where doublers (1 and 2) will be bonded, to provide improved adhesion.

22. Position doublers (1 and 2) and drill pilot holes 0.098 to 0.102 inch (0.249 to 0.251 mm) through the doublers (1 and 2) using the holes of the vertical stabilizer skins.

23. Using adhesive (C-317) on faying surfaces, bond doublers (1) and (2) on internal surface of vertical stabilizer assembly (3) in locations identified (Figure 9). Clecos may be used to hold the doublers in position during the adhesive cure period. **Allow 16 hours to cure**.

-NOTE-

Rivet sizes may vary if oversized rivets are required.

24. Position top end cap assembly (1, Figure 8) on vertical stabilizer (2). Open all pilot holes to the full size required (BHT-ALL-SRM, Chapter 3 and Table 3-28).

25. Remove top end cap assembly, deburr all drilled holes, and using a 10X magnifying glass inspect holes for damage.

    a. If no damage is noted, go to step 26.

    b. If damage or cracking is noted the hole may be opened to the next oversize rivet size. Go to step 25 to re-inspect hole(s).

    c. It is permissible to use oversized rivets NAS9301B-5, NAS9304B-4, or NAS9304B-5 as required. Minimum edge distance of 1.2D with forward and aft edge of skins and 1.5D with upper edge of skins is acceptable.

    d. If hole(s) can no longer go beyond the allowable oversize dimensions contact Product Support Engineering at productsupport@bellflight.com for guidance. Once a PSE disposition has been provided, go to step 26.

        (1) This may require the submittal of a Structural Repair Request (General Information Letter GEN-22-154).

26. Pass anti-collision light cable and connector through forward opening of top end cap assembly.

27. Pass NAV/VOR/GS antenna coaxial cable connector (3430AT1P1) through aft opening of top end cap assembly.

28. Install top end cap assembly (1, Figure 7) using the rivets (8 and 9) or oversized rivets previously identified. Overcoat rivet heads with sealant (C-251).

29. Verify electrical bonding (Class L) of top end cap in Area 1 identified (Figure 12). Maximum resistance not to exceed 10 milliohms (BHT-ELEC-SPM, Chapter 8).

30. Using sealant (C-251), fillet seal top end cap assembly, including ends, in areas identified (Figure 13). Allow sufficient time for sealant to cure.

31. Using screws (1, Figure 14) in fore and aft existing holes, locate tuning weight (2) and/or washers (3) on top end cap assembly. Using the new lateral attachment holes of the weights, mark the two additional holes to be added to the tuning weight and washers.

32. Using a drill press, drill two holes 0.203 to 0.208 inch (5.156 to 5.283 mm) in the tuning weight (2) and washers (3) in the locations located in previous step (Figure 15). Deburr the holes.

33. Countersink 100° the two holes of tuning weight (2) drilled in previous step so that head of bolt (4, Figure 7) is flush with the tuning weight when installed.

-NOTE-

The tuning weight SLS-030-701-153 can be used as a spare part replacement for the SLS-030-701-137FM and SLS-030-701-139FM combined. The tuning weight SLS-030-701-153 can be used as a spare part replacement for the SLS-030-701-141FM.

34. Using a white permanent ink marker (or equivalent), mark tuning weight (Item 1 and 3, Figure 15) with a suffix “FM” after the part number. If the part number is not visible add it fully to the part.

    Example: SLS-030-701-137**FM** or SLS-030-701-141**FM**

35. Using a white permanent ink marker (or equivalent), mark washers (Item 2) with a suffix “FM” after the part number. If the part number is not visible add it fully to the part.

    Example: SLS-030-701-139**FM**

36. Apply a thin coat of polyurethane enamel clearcoat (C-233) over the part numbers marked in previous steps. Allow sufficient time to dry.

37. Remove the caps and plugs from the connectors, as necessary.

38. Apply sealant (C-251) to the faying surface of tuning weight (1, Figure 16) and the top end cap assembly (2).

39. Pass the coaxial cable connector (3430AT1P1) through the hole in the center of the tuning weight (1).

40. Install tuning weight (1, Figure 16) to vertical stabilizer assembly (2) using bolt (3), washer (4), and nut (5). Torque nuts (5) 30 to 40 inch-pounds (3.4 to 4.5 Nm) and measured tare torque 2 to 18 inch-pounds (0.22 to 2 Nm).

41. Complete NAV/VOR/GS antenna installation (DMC-505-A-34-52-02-00A-720A-A).

    a. Use bolts (2, Figure 7) and washers (3).

42. Install the anti-collision light assembly (DMC-505-A-33-43-01-00A-720A-A).

    a. Verify electrical bonding (Class L) of top end cap in Area 2 identified (Figure 12). Maximum resistance not to exceed 10 milliohms (BHT-ELEC-SPM, Chapter 8).

43. Gain access to tail rotor gear box support area (Figure 17).

44. Remove organic finish from area indicated (Figure 17). Ensure proper electrical bonding (Class R-1) of NAV/VOR/GS antenna coaxial cable connection. Maximum resistance not to exceed 2.5 milliohms (BHT-ELEC-SPM, Chapter 8).

45. Fillet seal edges of NAV/VOR/GS antenna coaxial cable support (1) using sealant (C-251). Allow sufficient time for sealant to cure.

-NOTE-

Organic finish (paint coating) required will vary between helicopters depending on the color of the vertical stabilizer assembly.

46. Apply organic finish to the top end cap and vertical stabilizer assembly as required. Allow sufficient time to dry prior to accomplishment of the next steps (BHT-ALL-SPM, Chapter 4).

47. Make an entry in the helicopter logbook and historical service records indicating compliance with **PART IV** of this Alert Service Bulletin.

48. The accomplishment of **PART IV** of this bulletin is considered a terming action to **PART III** of this bulletin.

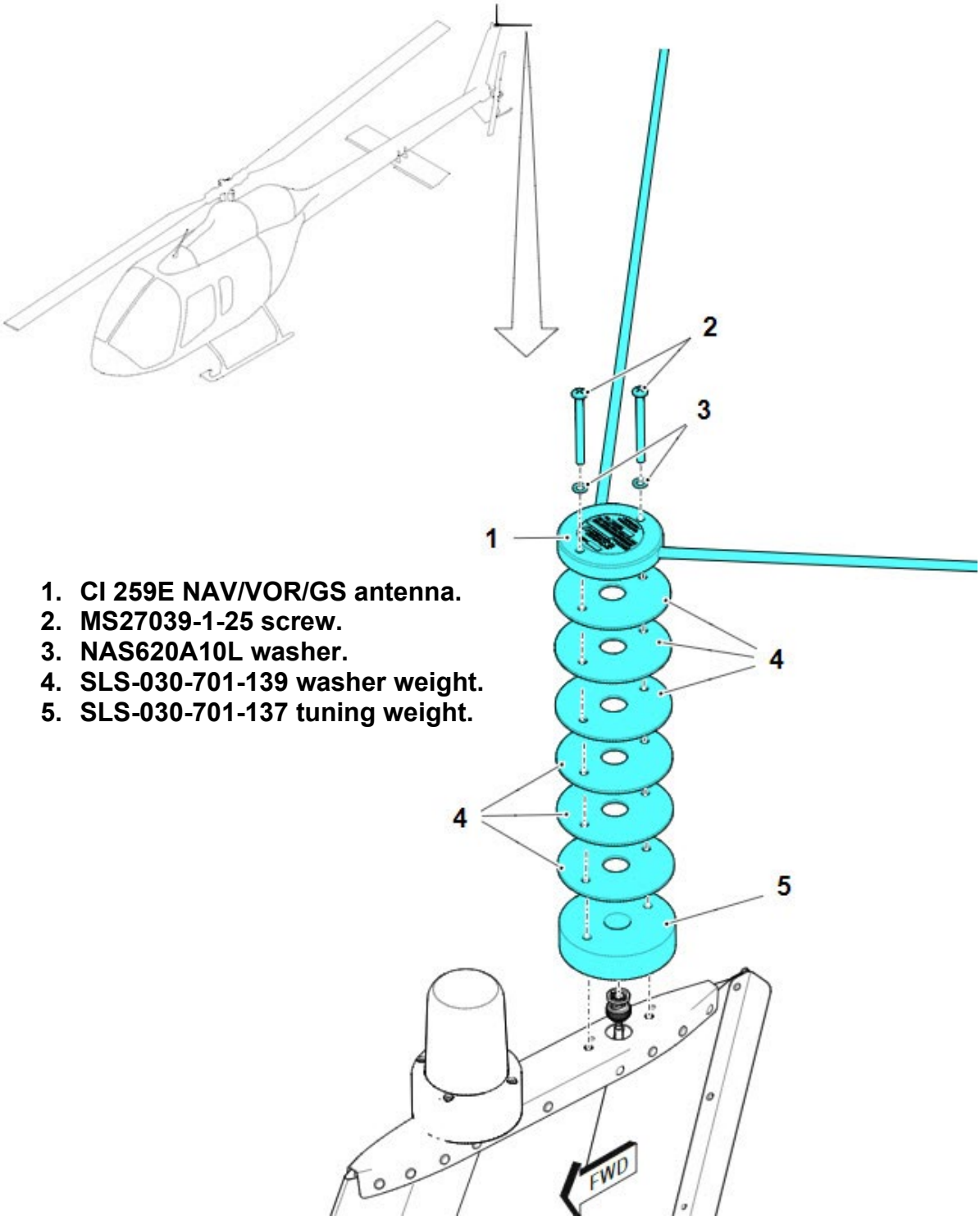

1. CI 259E NAV/VOR/GS antenna.
2. MS27039-1-25 screw.
3. NAS620A10L washer.
4. SLS-030-701-139 washer weight.
5. SLS-030-701-137 tuning weight.

Figure 1 – NAV/VOR/GS Antenna and Tuning Weight Installation (helicopter serial numbers 65011 through 65169)

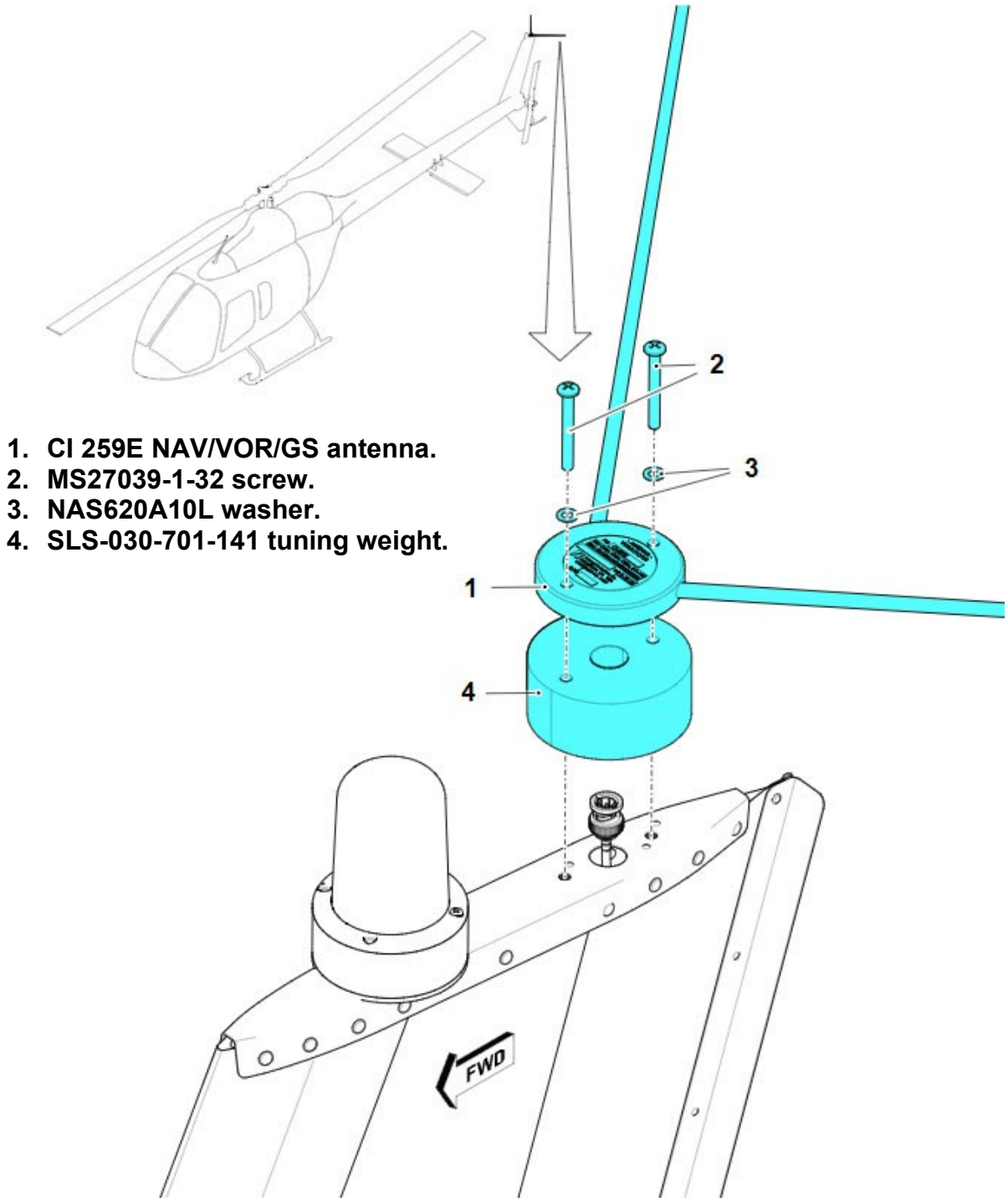

Figure 2 – NAV/VOR/GS Antenna and Tuning Weight Installation (helicopter serial numbers 65170 and subsequent)

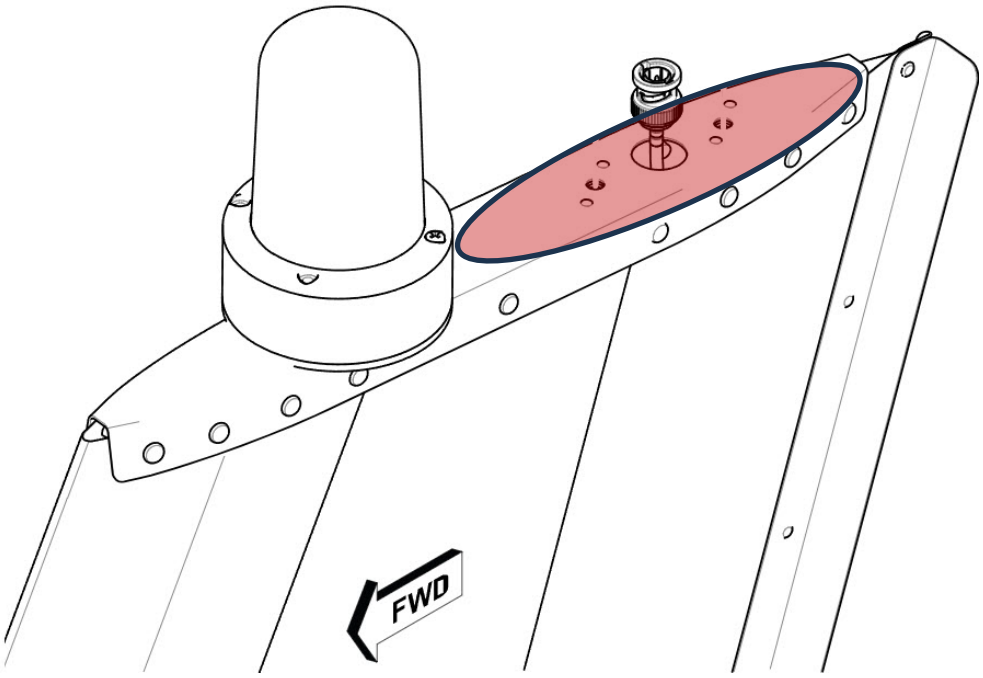

Figure 3 – Area of Detailed inspection

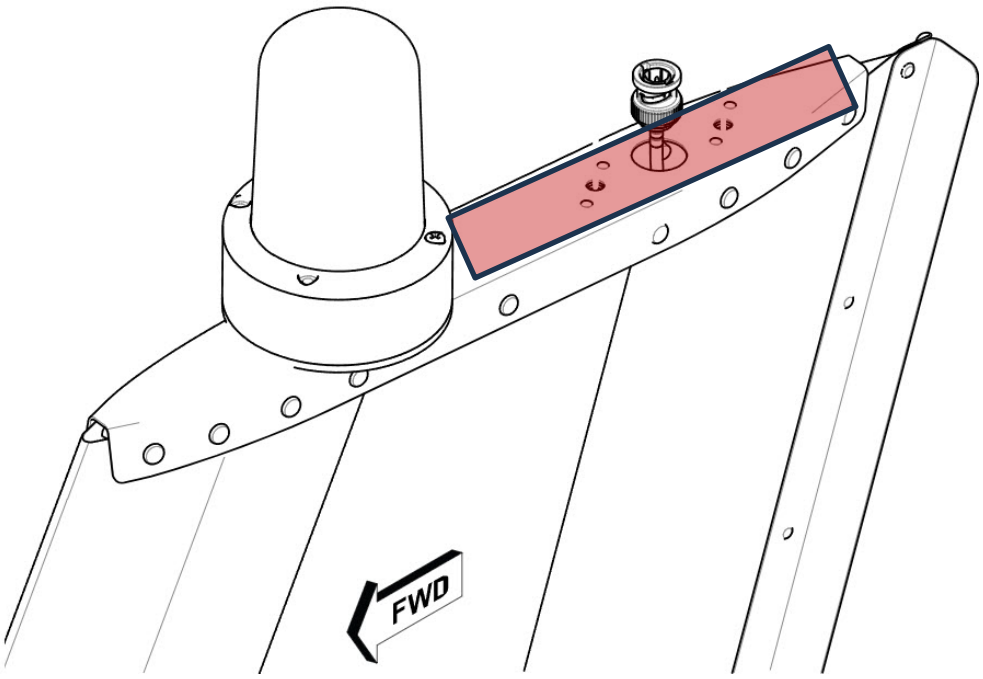

Figure 4 – Area to Apply Tape (C-454)

1. **NAS9301B-4-01 rivet.**
2. **NAS9301B-4-02 rivet.**
3. **SLS-030-701-125 top end cap assembly.**

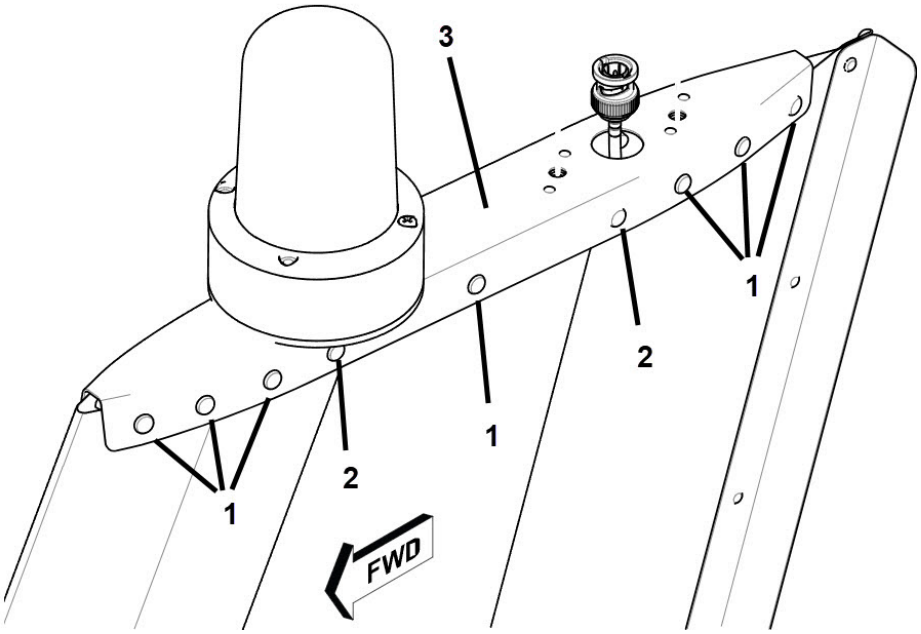

Figure 5 – Location of Rivets
(left side shown – right side is the same)

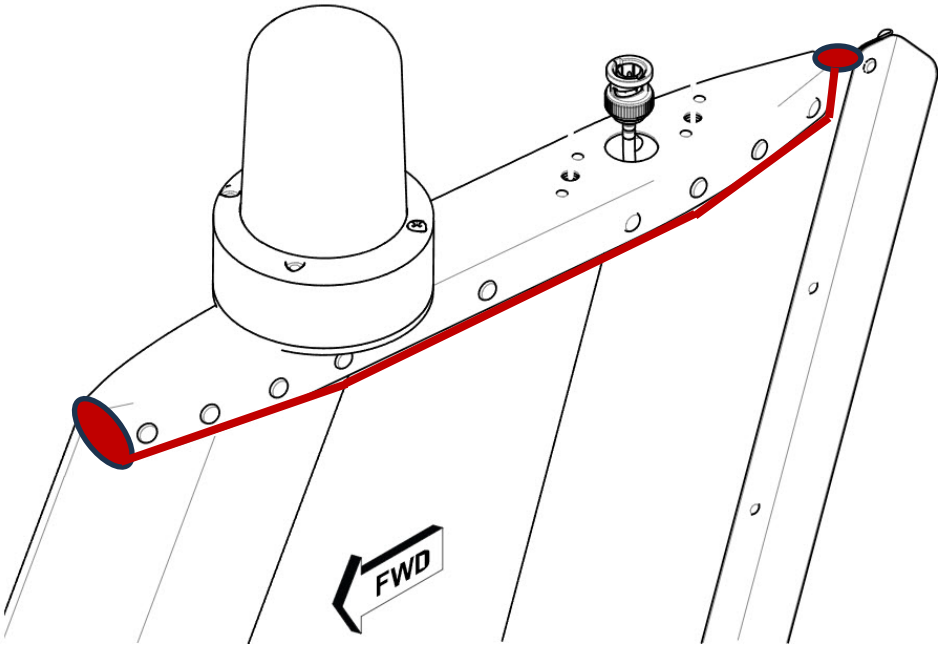

Figure 6 - Locations for Sealant (C-251) Application
(apply to both sides)

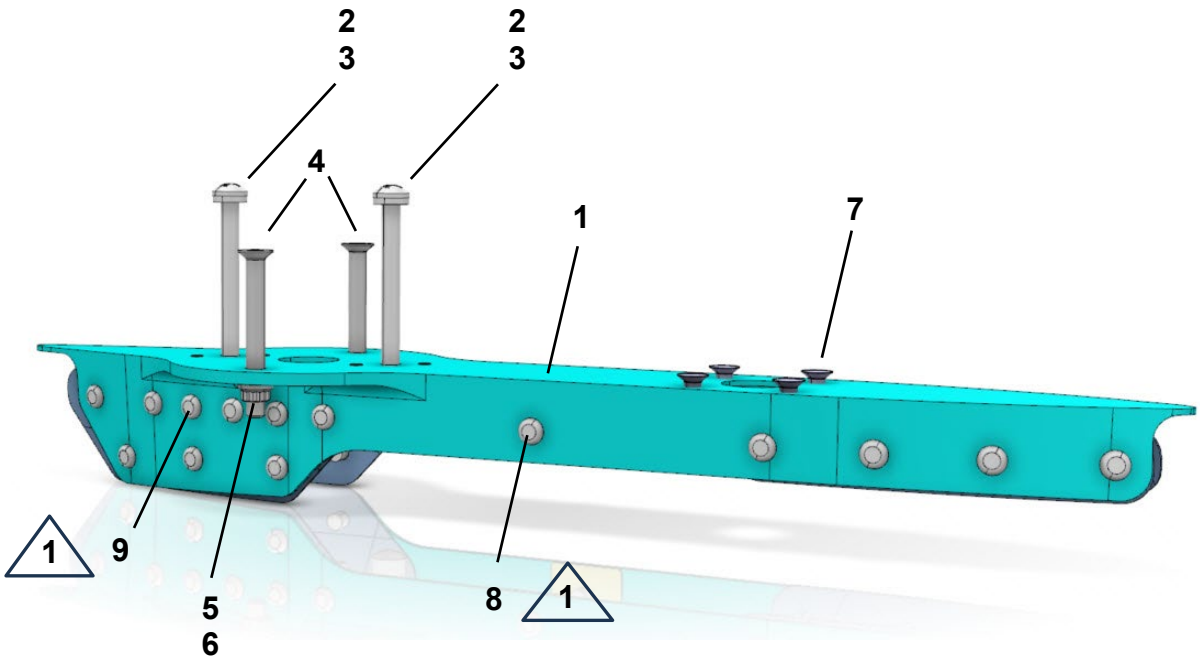

1. Top end cap assembly SLS-704-701-101
2. Screw MS27039-1-37 (2 places)
3. Washer NAS620A10 (2 places)
4. Bolt NAS7103-20 (2 places)
5. Washer NAS620A10 (2 places)
6. Nut NAS9926-3L (2 places)
7. Rivet NAS9302B-5-03 (4 places)
8. Rivet NAS9301B-4-02 (26 places)
9. Rivet NAS9301B-4-01 (2 places – opposite sides)

NOTES:

1. Oversized rivets NAS9301B-5-02, NAS9404B-4-02, or NAS9304B-5-02 may be used, as required.

Figure 7 – Retrofit Top End Cap Assembly SLS-704-701-001

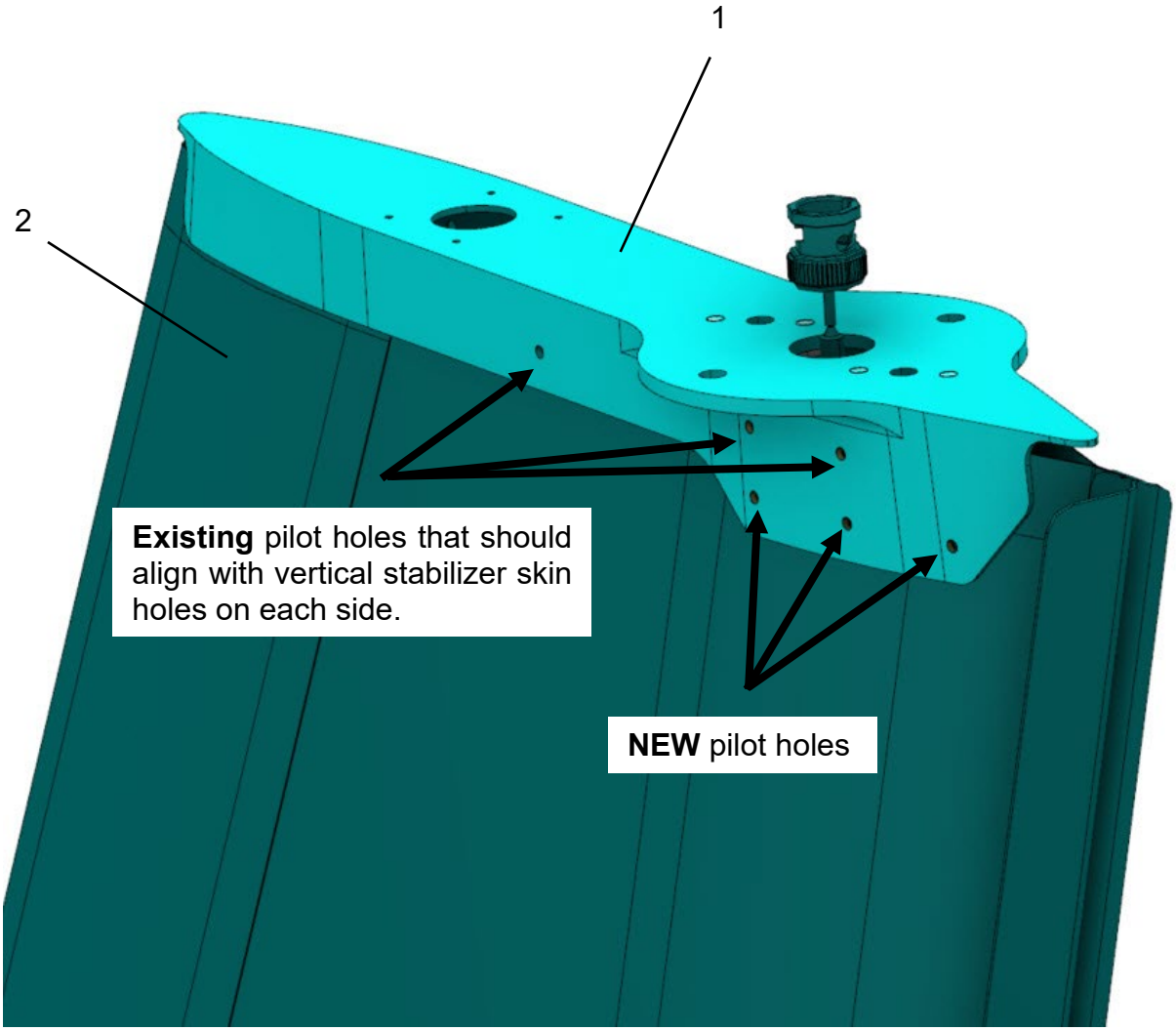

Figure 8 – Prefit of Top End Cap Assembly SLS-704-701-101

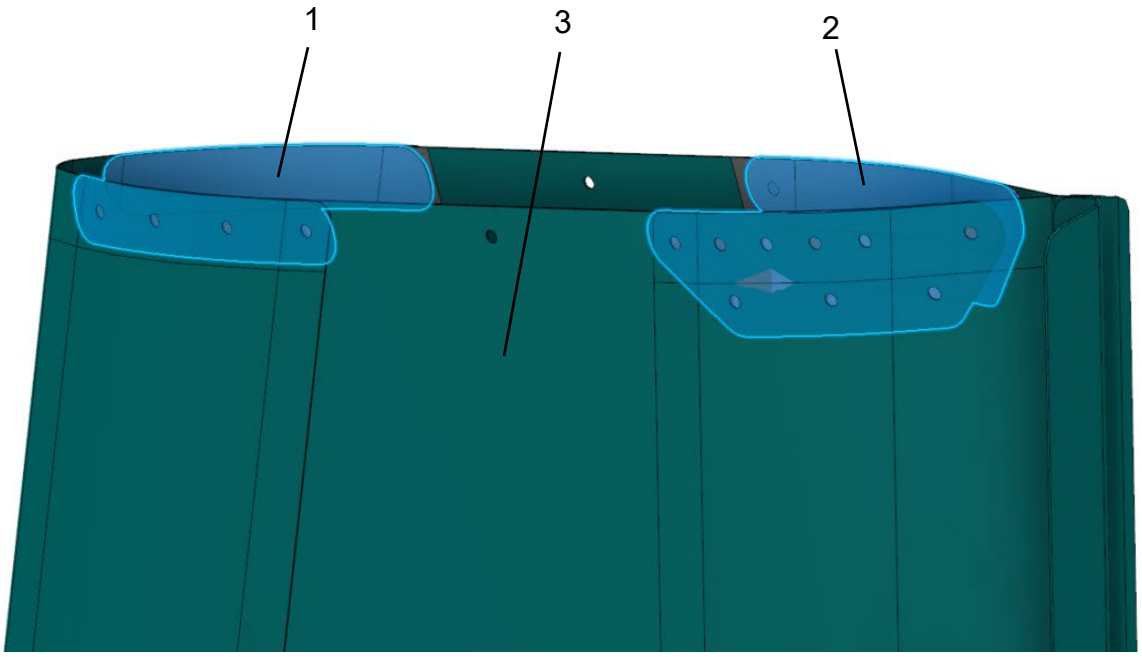

1. Doubler SLS-030-701-157 (2 places).
2. Doubler SLS-030-701-155 (2 places).
3. Vertical stabilizer assembly.

Figure 9 – Bonding of Doublers to Vertical Stabilizer

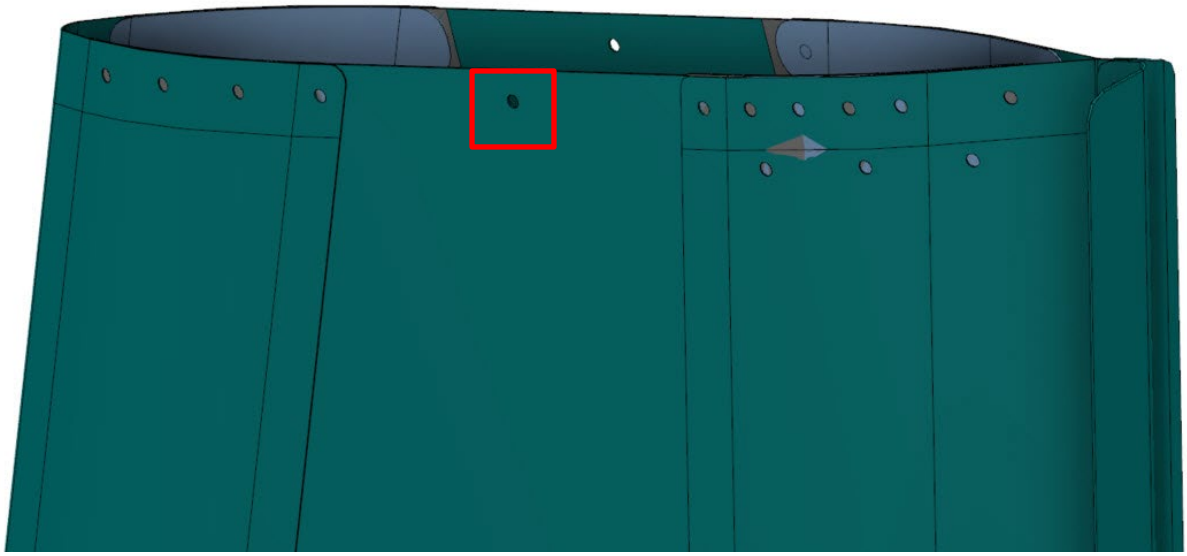

Figure 10 – Removal of Organic Finish for Electrical Bonding (left side)

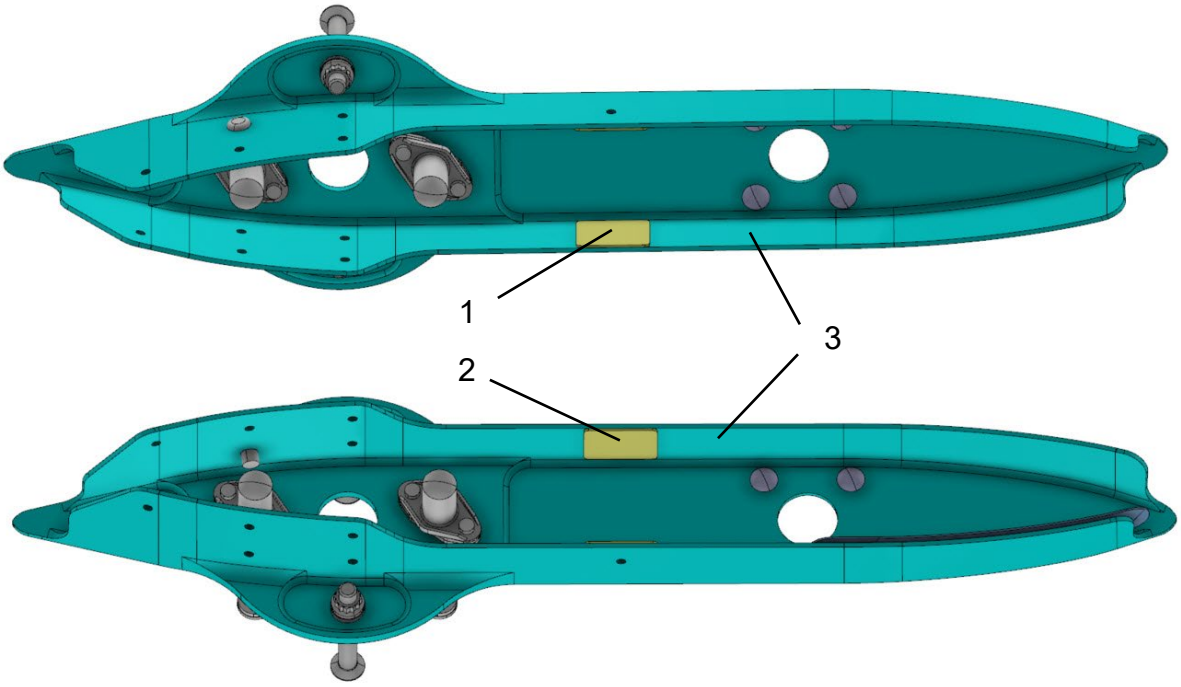

1. Shim SLS-030-701-159 (left side)
2. Shim SLS-030-701-159 (right side)
3. Top end cap assembly SLS-704-701-101

Figure 11 – Shim Installation to Top End Cap Assembly (view looking from under)

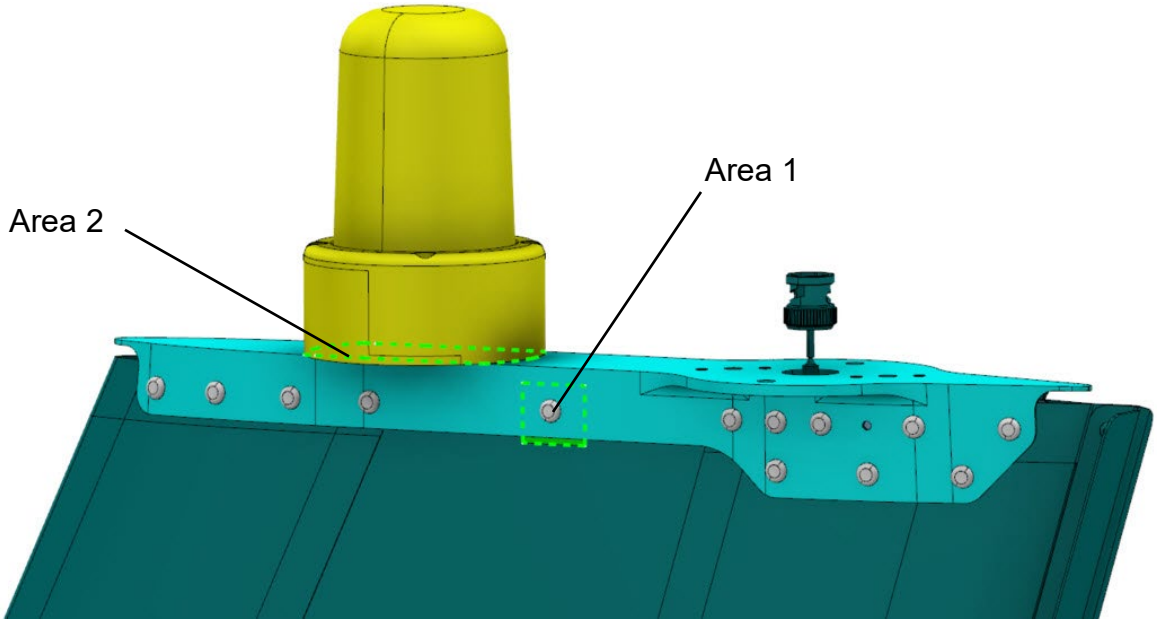

Figure 12 – Electrical Bonding of Top End Cap and Anti-Collision Light

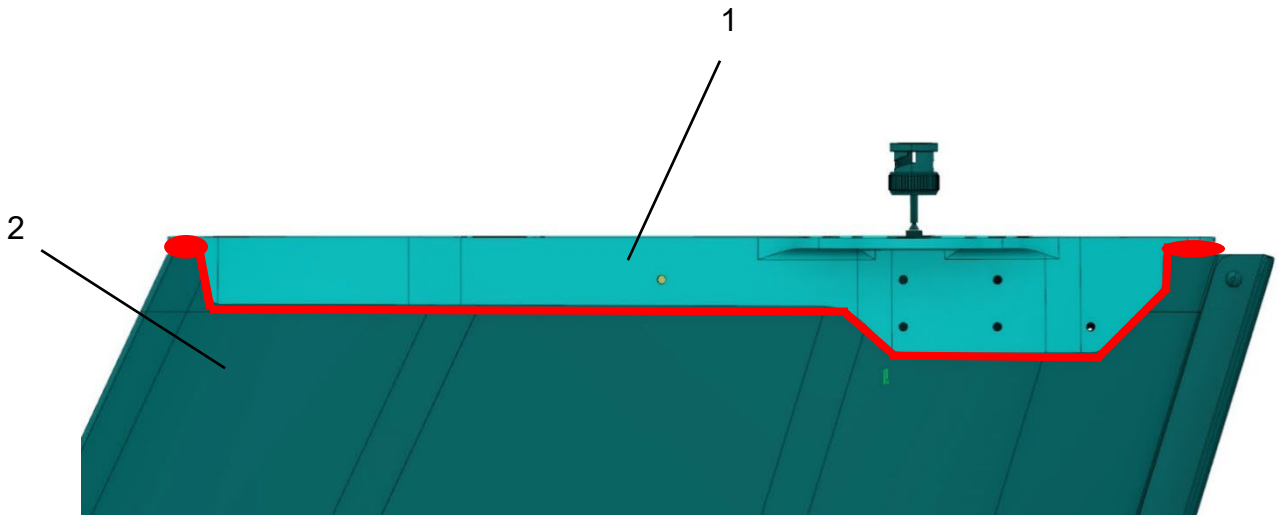

1. Top end cap assembly SLS-704-701-101
2. Vertical stabilizer assembly

Figure 13 – Areas for Sealant Application (highlighted in red)

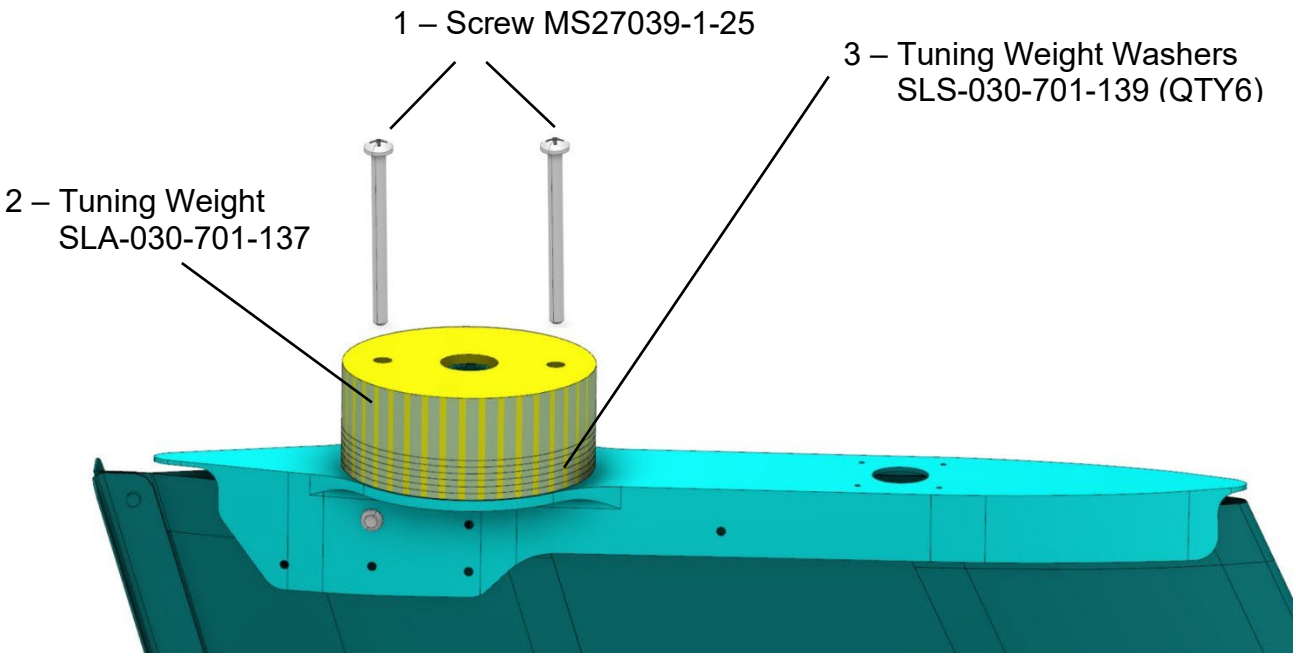

View A - Tuning Weight and Washers (65011 through 65169)

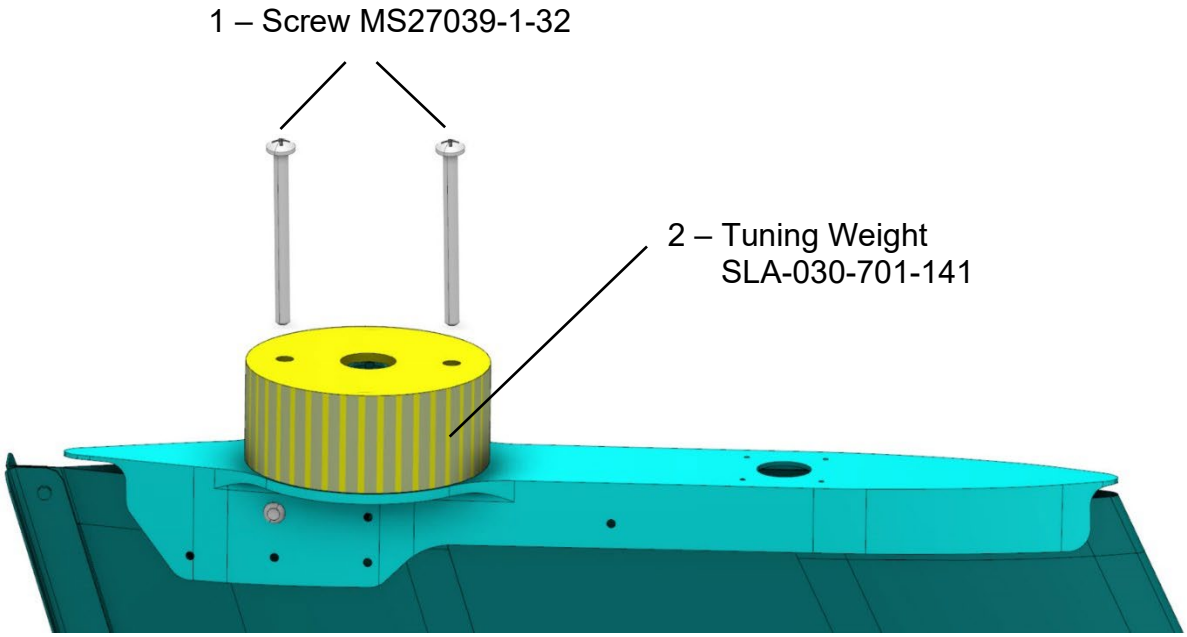

View B - Tuning Weight (65170 and subsequent)

Figure 14 – Location of New Tuning Weight and Washer Attachment Holes

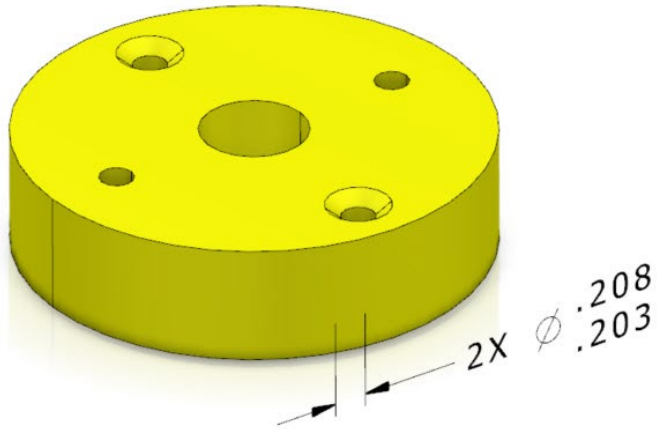

Item 1 - Tuning Weight SLS-030-701-137FM (QTY1)

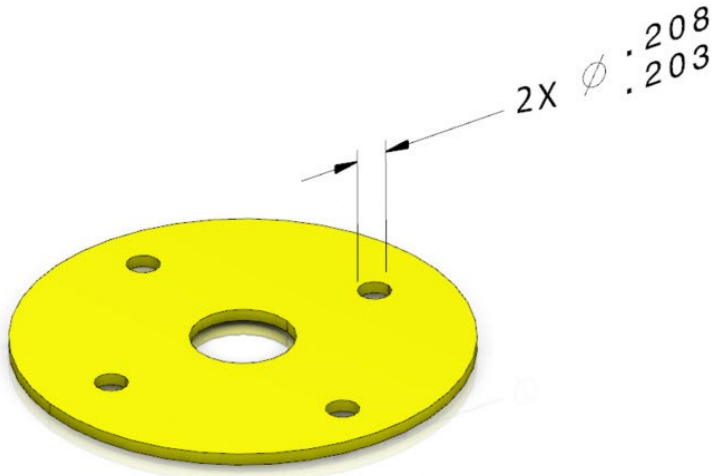

Item 2 - Tuning Weight Washer SLS-030-701-139FM (QTY6)

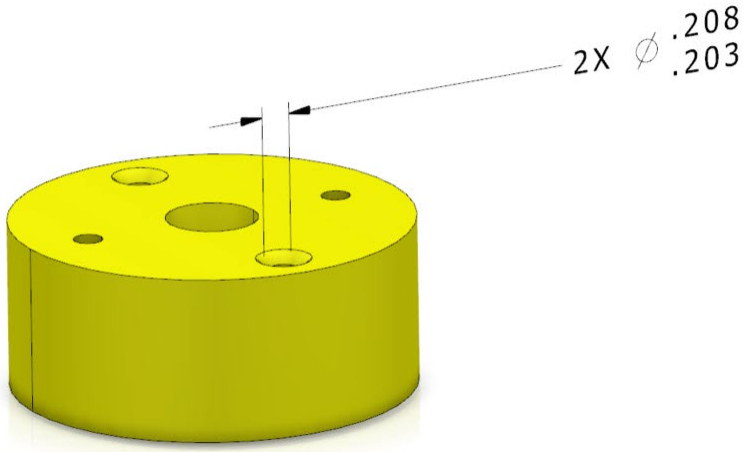

Item 3 - Tuning Weight SLS-030-701-141FM (QTY1)

Figure 15 – Tuning Weight and Washer Modification

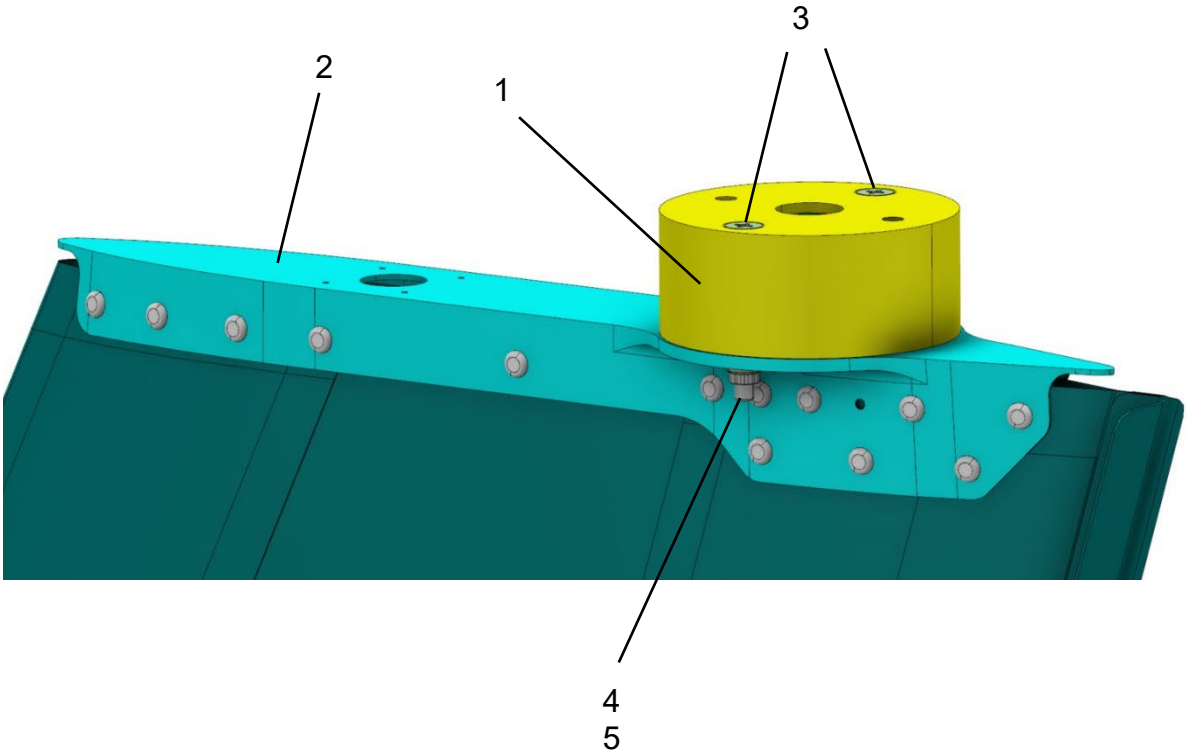

1. Tuning weight SLS-030-701-137FM or SLS-030-701-141FM
2. Top end cap assembly SLS-704-701-101
3. Bolt NAS7103-20 (2 places)
4. Washer NAS620A10 (2 places)
5. Nut NAS9926-3L (2 places)

Figure 16 – Tuning Weight Installation

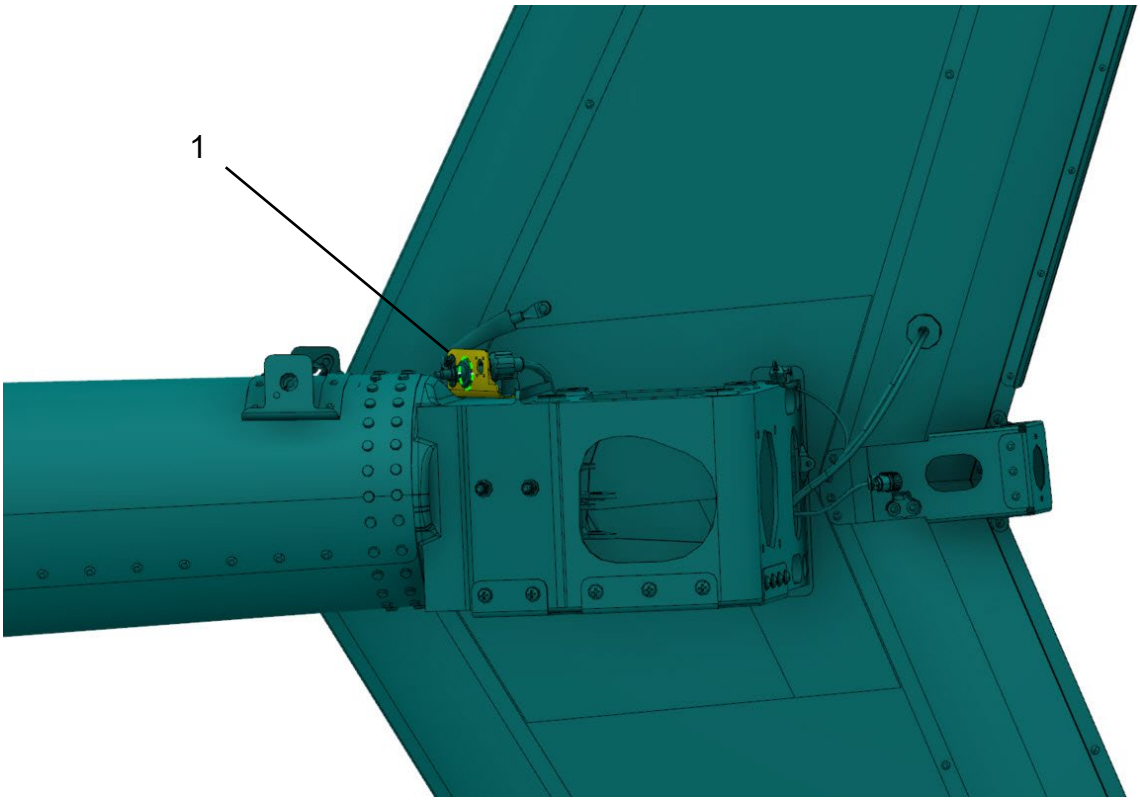

1. NAV/VOR/GS antenna coaxial cable support

Figure 17 - NAV/VOR/GS Antenna Coaxial Cable Support