A Textron Company

TECHNICAL BULLETIN 429-25-73

8 October 2025

MODEL AFFECTED: **429**

SUBJECT: **AFT AVIONICS BAY BAFFLE, INTRODUCTION OF**

HELICOPTERS AFFECTED: **Serial numbers 57001 through 57574**

[Serial number 57575 and subsequent will have the intent of this bulletin accomplished prior to delivery.]

COMPLIANCE: At customer's option.

DESCRIPTION:

Bell has received several field reports of water ingress in the aft avionics bay. This TB introduces the addition of a new baffle duct 429-025-642-101, two 0.375 inch drain holes and a 1.000 inch gap in the aft lower fairing seal to complete the drain path.

Applicability of this bulletin to any spare part shall be determined prior to its installation on an affected helicopter.

APPROVAL:

The engineering design aspects of this bulletin are Transport Canada Civil Aviation (TCCA) approved.

CONTACT INFO:

For any questions regarding this bulletin, please contact:

Bell Product Support Engineering
Tel: 1-450-437-2862 / 1-800-363-8023 / productsupport@bellflight.com

Approved for public release.

MANPOWER:

Approximately 4.0 man-hours are required to complete this bulletin. This estimate is based on hands-on time and may vary with personnel and facilities available.

WARRANTY:

There is no warranty credit applicable for parts or labor associated with this bulletin.

MATERIAL:

Required Material:

The following material is required for the accomplishment of this bulletin and may be obtained through your Bell Supply Center.

Part Number	Nomenclature	Qty (Note)
429-704-041-101	**Retrofit kit – Baffle duct Consisting of:**	**1**
429-025-642-101	BAFFLE DUCT	1
429-704-041-131	CONSUMABLE KIT	1(1)
MS35842-15	CLAMP	1

NOTE 1: Consumable kit includes sealant 10875 (MIL-PRF-81733)

Consumable Material:
The following material is required to accomplish this bulletin, but may not require ordering, depending on the operator's consumable material stock levels. This material may be obtained through your Bell Supply Center.

Part Number	Nomenclature	Qty (Note)	Reference *
MIL-PRF-81733	SEALANT	A/R	C-251

* C-XXX numbers refer to the consumables list in the BHT-ALL-SPM, Standard Practices Manual

SPECIAL TOOLS:

None required.

WEIGHT AND BALANCE:

	Longitudinal		Lateral*	
Weight	**Arm**	**Moment**	**Arm**	**Moment**
+0.5 pounds +0.2 kg	319.9 inch 8125 mm	+160 inch-pounds 1869 kg x mm/100	-12.5 inch mm	-6 inch-pounds -73 kg x mm/100

* In lateral calculations, - is left and + is right.

ELECTRICAL LOAD DATA:

Not affected.

REFERENCES:

429-IPB, Illustrated Parts Breakdown
429-MM, Maintenance Manual
ALL-SPM, Standard Practices Manual
ALL-SRM, Structural Repair Manual

PUBLICATIONS AFFECTED:

429-IPB, Illustrated Parts Breakdown
429-MM, Maintenance Manual

ACCOMPLISHMENT INSTRUCTIONS:

1. Prepare the helicopter for maintenance.

   a. Remove aft fuselage fairing (400A) DMC-429-A-53-00-00-24A-520A-A

   b. Remove aft avionics compartment access panel (400B) DMC-429-A-53-00-00-25A-520A-A

2. Install new duct 429-025-642-101 over outlet duct 429-025-621-101 or 429-025-641-101. If you have duct 429-025-621-101, you will need to trim the flange as shown as shown in Figure 1, Section E-E.

   a. Apply sealant as shown in section C-C, seal only between point A and point B.

   b. Position duct 429-025-642-101 with the arrow pointing UP as shown in View A.

CAUTION

Do not exceed 12 to 15 inch-pounds torque of clamp, to not damage baffle duct and outlet duct.

c. Install clamp, torque 12 to 15 inch-pounds (1.36 Nm to 1.70 Nm) as shown in View B.

3. Add two drain holes as follow:

   a. Mark the location of the two new holes as shown in View D.

   b. Drill 2 holes 0.374 inch (9.95 mm) to 0.385 inch (9.78 mm) in panel assembly 429-030-602 as shown in View D. Refer to the BHT-ALL-SRM, Chapter 4 for drilling composites.

4. Trim seal 120-199-2 on Skin Assy 429-030-657 as shown in View F.

5. Re-install aft avionics compartment access panel (400B) DMC-429-A-53-00-00-23A-720A-A

6. Re-install aft fuselage fairing (400A) DMC-429-A-53-00-00-22A-720A-A

7. Make an entry in the helicopter logbook and historical service records indicating compliance with this Technical Bulletin.

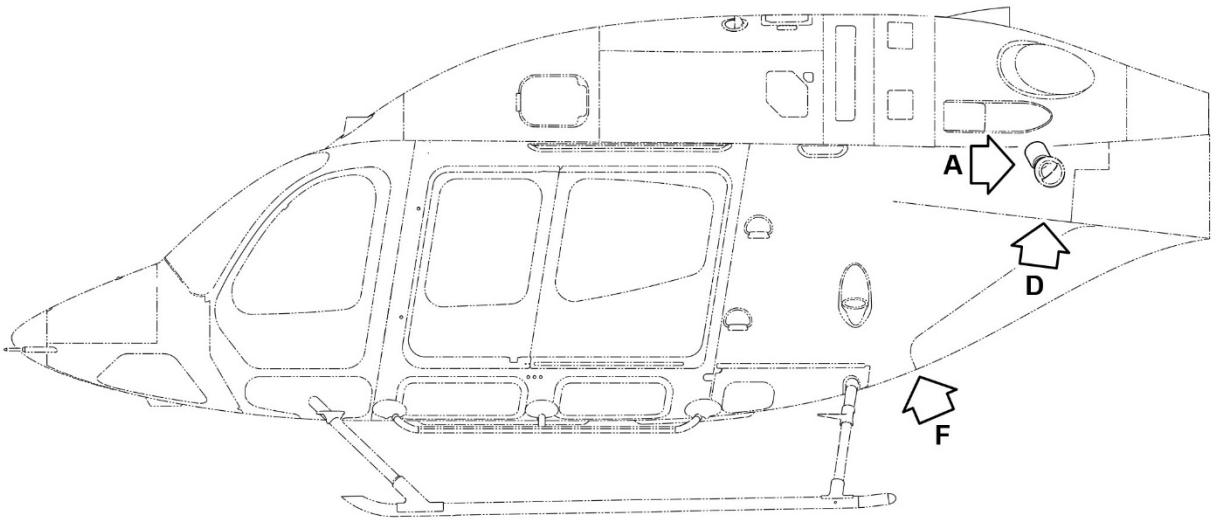

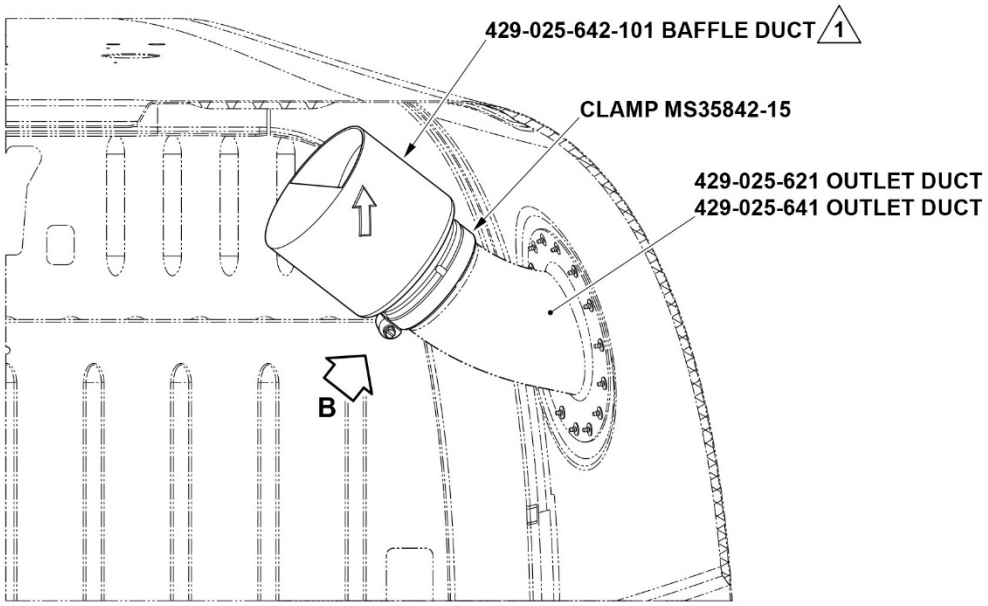

VIEW A

25501_001a

Figure 1 – Aft Avionics Bay Baffle (Sheet 1 of 4)

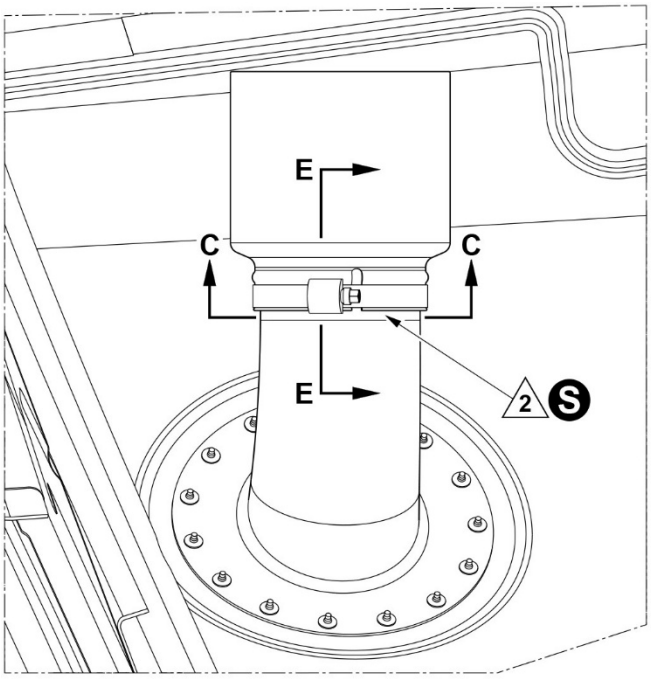

VIEW B

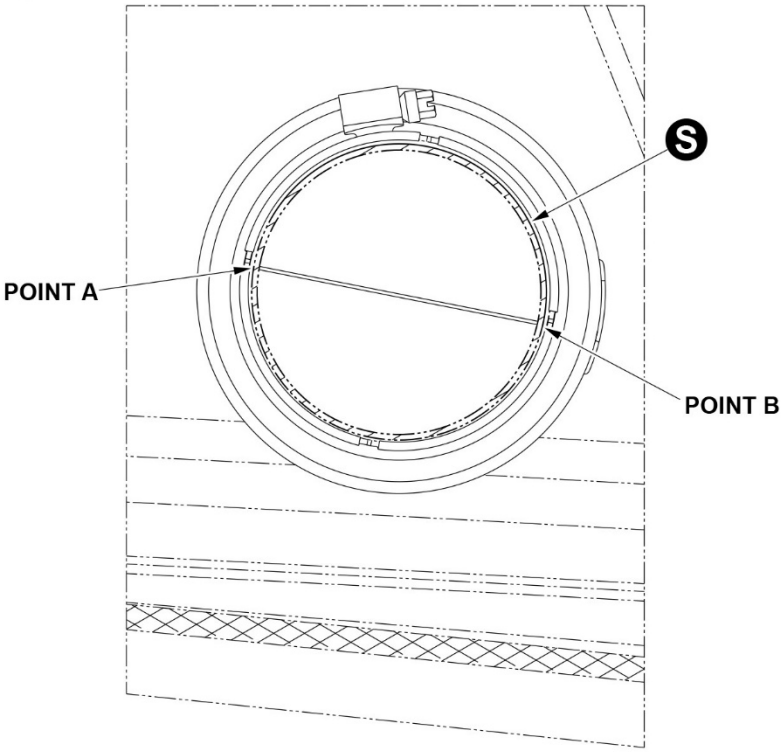

SECTION C-C

25501_001b

Figure 1 – Aft Avionics Bay Baffle (Sheet 2 of 4)

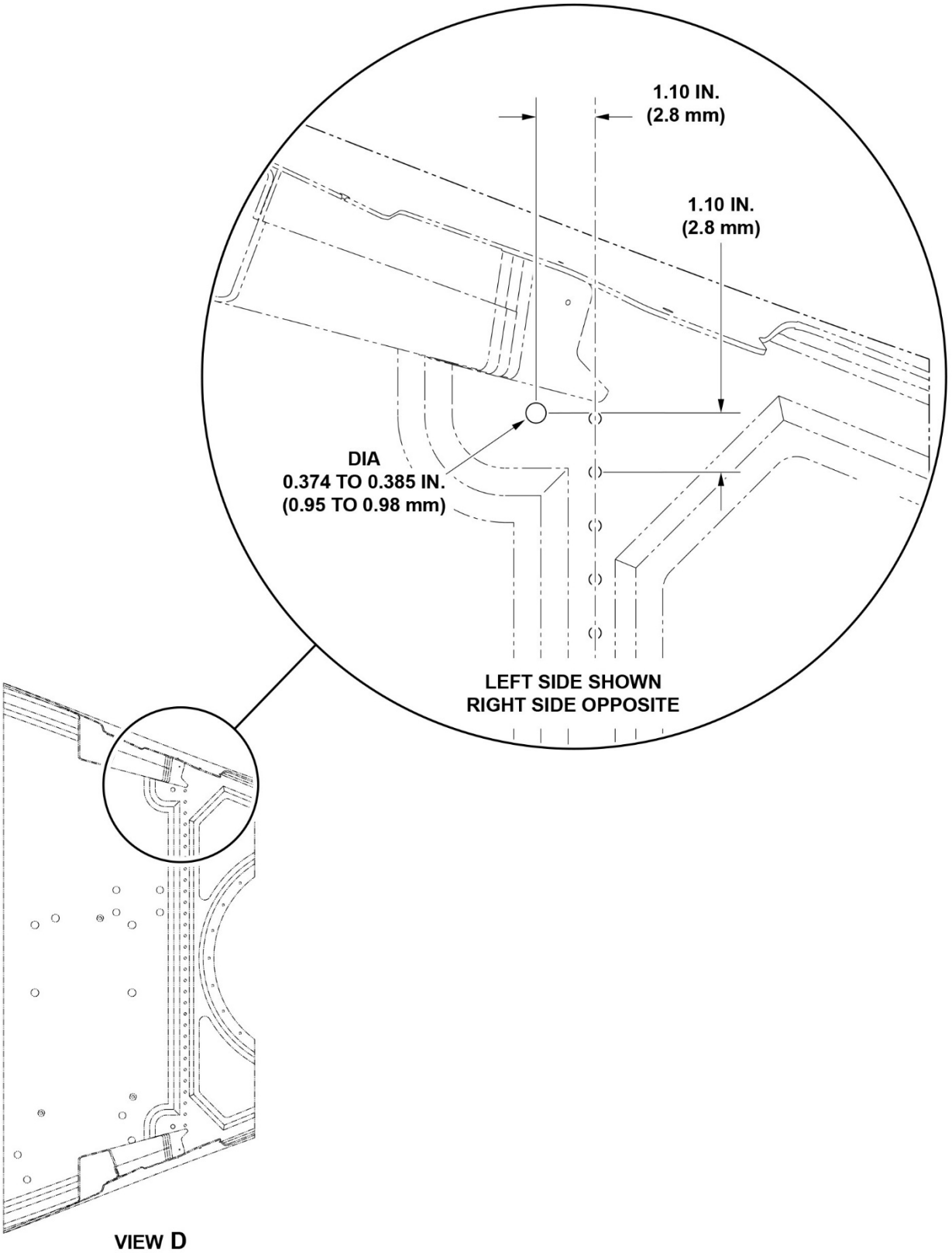

25501_001c

Figure 1 – Aft Avionics Bay Baffle (Sheet 3 of 4)

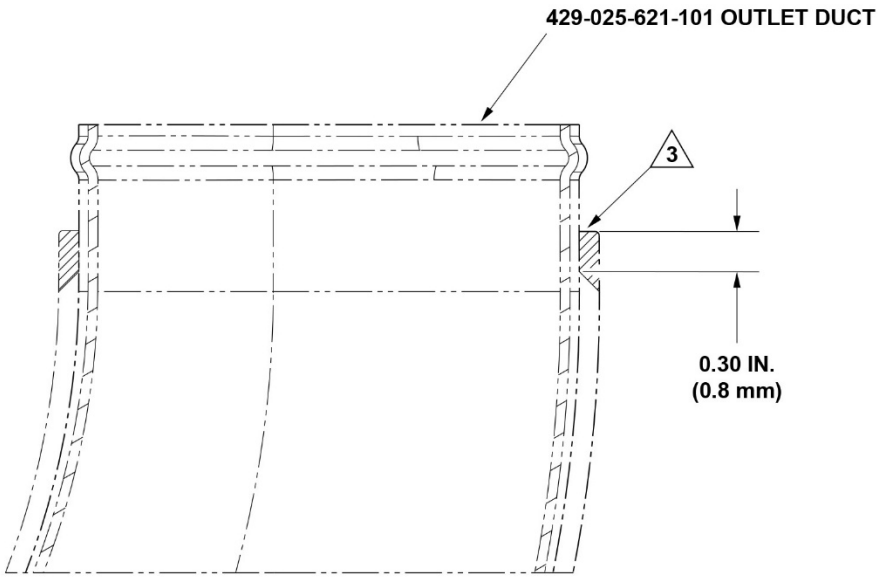

SECTION E-E

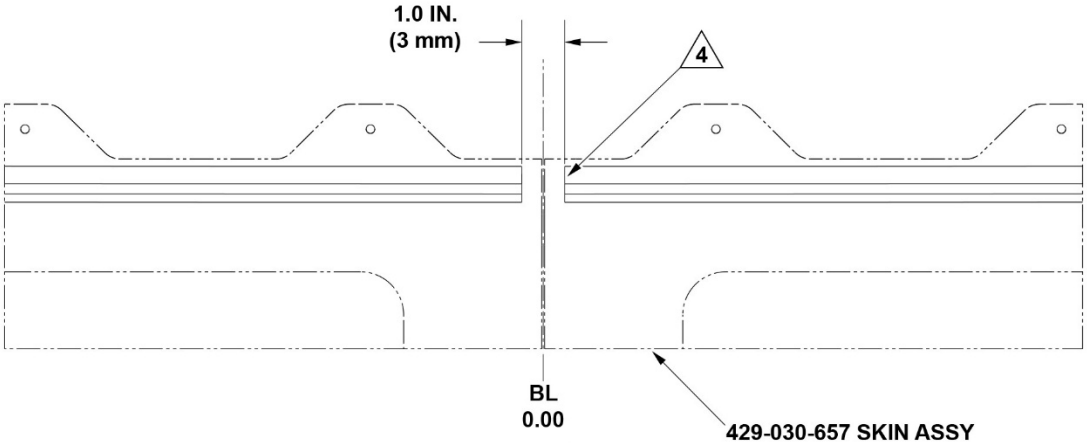

VIEW F

S SEALANT (C-251)

NOTES

1. Install with arrow pointing up.
2. Seal only between point A and point B.
3. Trim rib approximately as shown to remove interference with clamp installation.
4. Trim 120-199-2 seal ref as shown.

25501_001d

Figure 1 – Aft Avionics Bay Baffle (Sheet 4 of 4)