A Textron Company

ALERT SERVICE BULLETIN **429-25-66**

PSL # 2441

1 May 2025

MODEL AFFECTED: **429**

SUBJECT: **FORWARD LIFT FRAME COVERS 429-030-565-101/-102/-105/-106 GAP CONDITION, ONE TIME INSPECTION AND RE-WORK OF.**

HELICOPTERS AFFECTED: **Serial numbers 57001 through 57447, 57449 through 57507, 57509 through 57532, 57535, 57539 through 57542.**

[Serial numbers 57448, 57508, 57533, 57534, 57536 through 57538, 57543 and subsequent will have the intent of this bulletin accomplished prior to delivery.]

COMPLIANCE: **PARTS I & II** – Within 400 hours or 12 months, whichever comes first, after the release date of this bulletin.

DESCRIPTION:

Bell has discovered the possibility of a gap between the forward lift frame 429-030-311-115/-117/-119 and the aft lift frame covers 429-030-565-101/-102/-105/-106. The gap is caused by mislocated holes in the aft covers due to the incorrect positioning of the cover in the holding fixture during the drilling operation. The gap between the aft cover and the lift frame can result in increased stress on the forward lift frame which may lead to fatigue cracks if not corrected. This bulletin is separated into two parts for maintenance planning flexibility. **PART I** can be accomplished any time before **PART II** provided that both parts are accomplished within the 400 hour or 12-month compliance time**.** Both parts can also be accomplished concurrently. The accomplishment of **PART II** may not be required if the gap measurements fall within the limits specified in Table 1.

Applicability of this bulletin to any spare part shall be determined prior to its installation on an affected helicopter.

APPROVAL:

The engineering design aspects of this bulletin are Transport Canada Civil Aviation (TCCA) approved.

CONTACT INFO:

For any questions regarding this bulletin, please contact:

Bell Product Support Engineering
Tel: 1-450-437-2862 / 1-800-363-8023 / productsupport@bellflight.com

MANPOWER:

Approximately 16 man-hours are required to complete **PART I** of this bulletin. Approximately 16 man-hours are required to complete **PART II** of this bulletin. This estimate is based on hands-on time and may vary with personnel and facilities available.

WARRANTY:

Owners / Operators of Bell Helicopters who comply with the instructions in this bulletin will be eligible to receive Labor for the inspection per the Bulletin. The www.mybell.com portal allocates specific warranty entitlement for an aircraft by serial number. The Product Service Letter (PSL) number which will be listed below the bulletin number on the introduction page. This is going to be a required field when submitting a claim on the Bulletins Tab for replacement parts, labor, and/or freight. If you receive an ASB or TB that does not have a PSL number, then there is no warranty entitlement for that bulletin.

Labor entitlement: Yes.

PART I $1,760.0 USD
PART II $1,760.0 USD

To receive labor, under warranty:

- Comply with the instructions contained in this Bulletin no later than the applicable date in the “compliance section”.
- If there is a PSL number identified in the bulletin you will be required to enter this PSL number which will validate warranty entitlement for the selected aircraft. Please ensure that you use the Bulletin tab on the warranty section on www.mybell.com portal to file your claim.

You can find out how to submit a warranty claim in the link below.
https://bh.my.site.com/helpcenter/s/topic/0TO1T000000EpSbWAK/mybell-user-guidebooks

MATERIAL:

Required Material:
The following material is required for the accomplishment of this bulletin and may be obtained through your Bell Supply Center.

Part Number	Nomenclature	Qty (Note)
120-225C3T12P	Screw	As required (1)
120-225C3T13P	Screw	As required (1)
1000-49457-00	0.032 inch Thick Aluminum Sheet	1 sq ft (2, 3, 4)
1000-48476-00	0.04 inch Thick Aluminum Sheet	1 sq ft (2, 3, 4)
1000-49495-00	0.05 inch Thick Aluminum Sheet	1 sq ft (2, 3, 4)
1000-49527-00	0.063 inch Thick Aluminum Sheet	1 sq ft (2, 3, 4)
1000-49564-00	0.071 inch Thick Aluminum Sheet	1 sq ft (2, 3, 4)
1000-49915-00	0.08 inch Thick Aluminum Sheet	1 sq ft (2, 3, 4)
1000-48970-00	0.09 inch Thick Aluminum Sheet	1 sq ft (2, 3, 4)
1000-04648-00	0.125 inch Thick Aluminum Sheet	1 sq ft (2, 3, 4)

NOTES:

1. Screw length will depend on the measurements for the grip length determination in the shimming area(s).
2. As required, depending on the thickness of the shim needed to fill the gap between the lift frame and aft forward-lift frame covers.
3. 7075-T6 aluminum alloy sold by the square foot.
4. As an alternate, 7075-T6 aluminum alloy sheet per AMS-QQ-A-250/12 of appropriate thickness may be purchased locally through any commercial distributor and can be used as a substitution for the aluminum sheet metal part numbers listed in the **Required Material** table.

Consumable Material:
The following material is required to accomplish this bulletin, but may not require ordering, depending on the operator's consumable material stock levels. This material may be obtained through your Bell Supply Center.

Part Number	Nomenclature	Qty (Note)	Reference *
2230-00425-00	Epoxy polyamide primer	1 Pt (1)	C-204
2100-00345-00	Chemical film material	1 Qt (1)	C-100
2000-00713-00	Anti-chafing tape	Roll, 1" WIDE (1)	C-454
2100-12322-00	Paint remover	5 Gal (1)	C-435
2230-05688-00	Paint remover	1 PT (1)	C-436
2000-01022-00	Adhesive	1 PT (1)	C-317
Commercial	Masking tape	1 Roll (1)	C-518
2000-09121-00	Release Tape	Roll, 2" WIDE (1)	C-460
Commercial	Sharpie 13601 (Indelible ink marker)	1	N/A
Commercial	Abrasive Paper	As required	C-406
Commercial	Cheesecloth	As required	C-486
2100-00061-00	Acetone	1 Gal (1)	C-316
Commercial	Isopropyl Alcohol	As required	C-285

* C-XXX numbers refer to the consumables list in the BHT-ALL-SPM, Standard Practices Manual

NOTE 1: Quantity indicated is the format the product is delivered in. Actual quantity required to accomplish the instructions in this bulletin may be less than what has been delivered.

SPECIAL TOOLS:

None required.

WEIGHT AND BALANCE:

Not affected.

ELECTRICAL LOAD DATA:

Not affected.

REFERENCES:

429-IPB Illustrated Parts Breakdown
429-MM Maintenance Manual
BHT-ALL-SPM Standard Practices Manual
Information Letter GEN-22-154

PUBLICATIONS AFFECTED:

429-IPB Illustrated Parts Breakdown
429-MM Maintenance Manual

ACCOMPLISHMENT INSTRUCTIONS:

PART I – Aft Forward-Lift Frame Cover Gap Inspection and Shimming

-NOTE-

Some helicopters that are affected by this bulletin have already been shimmed during manufacture but may still have excessive gaps between the lift frame (1) and the aft forward-lift frame covers (2 and 3). For those helicopters, gaps between the aft forward-lift frame cover (2 and 3) shims and the lift frame (1) shall not be equal or greater than 0.003 inch (0.08 mm). If gaps are equal or greater than 0.003 inch (0.08 mm), the aft forward-lift frame covers shall be re-shimmed per this bulletin.

1. Prepare the helicopter for maintenance.

2. Inspect for gaps between the forward lift frame (1, Figure 1) and the aft forward-lift frame covers (2 and 3) as follows:

   a. Remove the applicable interior panels to access the forward-lift frame cover (4), and the aft forward-lift frame covers (2 and 3) (DMC-429-A-25-10-00-08A-520A-A and DMC-429-A-25-20-00-03A-520A-A).

   b. Remove the forward lift frame cover (4), (DMC-429-A-53-00-00-34A-520A-A) but do not remove the aft forward-lift frame covers (2 and 3).

   c. Remove the screws in the 7 positions shown in Figure 1, View B from the left aft lift frame cover corner.

   d. On the right hand side corner, re-install four screws (two at each extremity) at each end of the 7 positions shown in Figure 1, View C.

-NOTE-

If **PARTS I** and **II** are not performed concurrently, ensure that the gap measurements are kept for the future reporting of results in accordance with **PART II**, step 6 if the gap measurement results require **PART II** to be accomplished.

e. Measure and record the gaps in each corner between the forward-lift frame (1, Figure 1) and the aft forward lift-frame covers (2 and 3). For each corner, measure the gap at the 7 screw positions as shown in Figure 1 Views B and C. Refer to **Table 1** for the interpretation of the results.

Table 1 – Gap Measurements and Required Actions

Gap Measurements	Helicopters With 5000 Hours Total Time Since New or Less	Helicopters With More Than 5000 Hours Total Time Since New
Less than 0.003 inch (0.08 mm)	No shimming required. Proceed to **PART I,** step 8. Accomplishment of **PART II** is not required.	
Between 0.003 inch (0.08 mm) and 0.010 inch (0.25 mm)	Shimming required. Go to **PART I**, step 3. Accomplishment of **PART II** is not required.	Shimming required. Go to **PART I**, step 3. Accomplish **PART II** on the applicable lift frame corner within the compliance time of this bulletin.
More than 0.010 inch (0.25 mm) and up to 0.125 inch (3.18 mm)	Shimming required. Go to **PART I**, step 3. Accomplish **PART II** on the applicable lift frame corner within the compliance time of this bulletin.	
More than 0.125 inch (3.18 mm)	Replace the applicable aft forward-lift frame cover. Proceed to **Part I**, step 2.c to shim as required the new cover and accomplish **PART II** on the applicable lift frame corner within the compliance time of this bulletin.	

3. Mark the extremities of the gap on the applicable aft forward-lift frame covers (2 and 3) as well as the lift frame (1) with a marker or some masking tape and remove the applicable aft forward-lift frame covers (2 and/or 3), (DMC-429-A-53-00-00-34A-520A-A).

4. Shim the gaps between the lift frame (1) and the aft forward-lift frame cover (2 and/or 3) as follows:

a. For gaps between 0.003” (0.08 mm) and 0.030” (0.76 mm), shim in accordance with the steps below. For gaps greater than 0.030 inch, go to step 4.b.

(1) On the aft forward-lift frame cover(s) (2 and/or 3), apply masking tape (C-518), around the area to be shimmed. Use the marks that were traced during step 3 as a reference.

(2) Lightly abrade the area to be shimmed on the aft forward-lift frame cover(s) (2 and/or 3) with 180 grit or finer sandpaper (C-406). Make sure not to completely remove the primer.

(3) Clean the area to be shimmed on the aft forward-lift frame cover (2 and/or 3) with a cheesecloth (C-486) dampened with isopropyl alcohol (C-285) or acetone (C-316).

CAUTION

Make sure not to damage the lift frame (1) when cutting the anti-chafing tape to remove it.

(4) On the lift frame (1), remove the anti-chafing tape (C-454) in the area(s) to be shimmed.

(5) Apply release tape (C-460) on the lift frame in the area(s) where the anti-chafing tape was removed.

-NOTE-

When applying the adhesive, make sure to minimize the presence of voids. Voids are not allowed within a one-hole distance from the center of any fastener to be installed. Voids outside this area are acceptable if the total number of voids is 10% or less than the total shimmed area. Edge voids are permitted.

-NOTE-

The aft forward-lift frame cover(s) (2 and/or 3) shall be installed on the lift frame (1) no later than 30 minutes after the application of the adhesive mixture.

(6) On the aft forward-lift frame cover(s) (2 and/or 3), apply adhesive (C-317) to the shimming area with a spatula. Use enough adhesive to obtain a positive squeeze-out when the lift frame cover (2 and 3) is installed on the lift frame (1).

(7) Install the aft forward-lift frame cover(s) (2 and/or 3) on the lift frame (1) with four screws (two at each extremity) at each end of the shimming area. Do not install screws in the holes that are in the shimming area.

(8) Remove the excess adhesive and let cure for a minimum of 16 hours.

(9) Remove the applicable aft forward-lift frame cover(s) (2 and 3).

(10) Drill out the cured adhesive in the aft forward-lift frame cover(s) (2 and/or 3) screw holes that are in the shimming area. The hole diameter is between 0.203 inch to 0.208 inch (5.16 mm to 5.28 mm).

(11) Remove the masking tape (C-518) from the aft forward-lift frame cover(s) (2 and/or 3).

(12) Remove the release tape (C-460) from the lift frame (1).

(13) Re-apply anti-chafing tape (C-454) in the shimming areas on the lift frame (1).

-NOTE-

The release tape (C-460) is thinner than the anti-chafing tape (C-454) by approximately 0.004 inch (0.10 mm). It may be necessary to sand down the shim to proper thickness to obtain a proper fit.

(14) If the shim thickness is greater than the gaps measured in step 2.e, sand down the shim to proper thickness to ensure proper fit.

(15) Go to step 5.

-NOTE-

The thickness of the aluminum sheet will depend on the highest gap measurement taken during step 2.e.

b. For gaps greater than 0.030 inch (0.76 mm), fabricate shims as required using a 7075-T6 aluminum sheet of appropriate thickness as follows:

(1) Trim each shim to a length of 11 inches (279.4 mm) and a width of 1.1 inches (28 mm).

(2) Taper each shim to the thickness required to fill the gap based on the measurements taken in step 2.e. The final shim thickness shall not exceed the maximum measured gap and shall taper to 0.003 inch (0.076 mm) or less at both ends of the shim. The surface finish shall be 125 RA or better.

(3) Trim the corner of each shim to a radius of 0.12 inch (3.04 mm).

(4) Form the shims to match the contour of the aft forward-lift frame cover(s)Locate the shims on the applicable aft forward-lift frame cover(s) (2 and 3) using the marked extremities from step 3. Back drill seven 0.203 inch to 0.208 inch (5.16 mm to 5.28 mm) holes in the shim using the holes on the lift frame covers. Ensure a minimum edge distance of 1.5D.

(5) Break all the sharp edges and deburr the holes drilled in the previous step.

(6) Apply chemical film treatment (C-100) on all the surfaces of the shims (ALL-SPM, Chapter 3).

(7) Refinish the shims using two coats of epoxy polyamide primer (C-204) (ALL-SPM, Chapter 4) and let dry.

(8) Lightly sand the faying surfaces of the shim and aft forward-lift frame cover(s) (2 and/or 3) with 180 grit or finer sandpaper (C-406). Make sure not to completely remove the primer.

(9) Clean the faying surfaces of the shim and aft forward-lift frame cover (2 and/or 3) with a cheesecloth (C-486) dampened with isopropyl alcohol (C-285) or acetone (C-316).

-NOTE-

If the thickness of the shim and the adhesive is greater than the gap(s) measured in step 2.e., it is permissible to sand down the shim to the proper thickness. Make sure to touch up the sanded areas with chemical film treatment (C-100) and epoxy polyamide primer (C-204) after the proper thickness is achieved.

-NOTE-

When applying the adhesive, make sure to minimize the presence of voids. Voids are not allowed within a one-hole distance from the center of any fastener to be installed. Voids outside this area are acceptable if the total number of voids is 10% or less than the total shimmed area. Edge voids are permitted.

(10) Bond shims to aft forward-lift frame covers (2 and 3) with adhesive (C-317) as follows:

(a) Properly clamp the shims to the aft forward-lift frame covers (2 and 3) to ensure that there is no over thickness caused by the adhesive.

(b) Wipe off the excess adhesive (C-317).

(c) Let the adhesive (C-317) cure for a minimum of 16 hours.

(d) Drill out the cured adhesive in the aft forward-lift frame cover(s) (2 and/or 3) screw holes as required.

5. Using an indelible ink marker, add an “FM” suffix at the end of the part numbers (Ex.: 429-030-565-101FM) and the helicopter serial number on the aft forward-lift frame covers (2 and 3).

-NOTE-

Make sure that there are no gaps in the four screw locations. If gaps are present, sand down the shim to achieve the proper thickness and contour. Make sure to touch up the sanded areas with chemical film treatment (C-100) and epoxy polyamide primer (C-204) after the proper thickness is achieved.

6. Install the aft forward-lift frame cover(s) (2 and/or 3) on the lift frame (1) with four screws (two at each extremity) at each end of the shimming area.

7. Verify that the post shimming gap between the aft forward-lift frame cover(s) (2 and/or 3) and the lift frame (1) is/are less than 0.003 inch (0.76 mm). If gaps are more than 0.003 inch (0.76 mm), re-do the shimming procedure.

-NOTE-

Steps 8 and 9 can be skipped if **PARTS I** and **II** are performed concurrently.

-NOTE-

Prior to the installation of the lift frame cover retaining screws, the proper grip length shall be determined in the areas where the shims are located. The length of the screws may vary for all 7 positions on each side.

8. Install aft forward-lift frame covers (2 and 3) and forward-lift frame cover (4) (DMC-429-A-53-00-00-32A-720A-A).

9. Install the applicable interior panels (DMC-429-A-25-10-00-08A-720A-A and DMC-429-A-25-20-00-05A-720A-A).

10. Make an entry in the helicopter logbook and historical service records indicating compliance with **PART I** of this Alert Service Bulletin.

PART II – Lift Frame Non-Destructive Inspection (NDI)

-NOTE-

Steps 1, 2, and 3 can be skipped if **PARTS I** and **II** are performed concurrently.

-NOTE-

PART II is only applicable to a lift frame corner that has a gap exceeding the limits specified in **Table 1**.

1. Prepare the helicopter for maintenance.

2. Remove the applicable interior panels to access the forward-lift frame cover (4, Figure 1) and the aft forward-lift frame covers (2 and 3) (DMC-429-A-25-10-00-08A-520A-A and DMC-429-A-25-20-00-03A-520A-A).

3. Remove the forward and aft forward-lift frame covers (2, 3 and 4) as required (DMC-429-A-53-00-00-34A-520A-A).

4. Remove the anti-chafing tape (C-454) on the lift frame (1) lower flange where the seven hole positions shown in Figure 1 views B and C are located.

-NOTE-

The Eddy Current Inspection is the preferred method to accomplish this bulletin. **Table 2** provides a list of Eddy Current qualified facilities throughout the world for convenience. If scheduling a qualified inspector to do an Eddy Current inspection is not possible, it is acceptable to use the fluorescent penetrant inspection (FPI) method (BHT-ALL-SPM, Chapter 6) as an alternative.

5. Perform an Eddy Current inspection of the applicable lift frame corner at the indicated areas as shown in Figure 1, View D through View I (as applicable). In addition to the information contained in the Standard Practices Manual (BHT-ALL-SPM, Chapter 6), the inspection shall also meet the following requirements:

   - The eddy current probe shall be a pencil type with a coil diameter no larger than 0.125 inch (3.18 mm);

- The equipment shall be calibrated on an aluminum crack standard and shall verify a minimum of 2 screen divisions of signal response from the shallowest Electrical Discharge Machined (EDM) notches. The phase angle display from the shallow notch must be easily separated from lift-off.

Alternatively, the FPI method can be used (BHT-ALL-SPM, Chapter 6). If this method is used, the paint in the inspection areas of the lift frame shall be removed with a chemical paint remover (C-435 or C-436) in accordance with BHT-ALL-SPM, Chapter 4. Removal of organic finish by hand sanding or plastic media blast is not permitted.

a. If one or more cracks are found, submit a structural repair request in accordance with Information Letter GEN-22-154 and submit the form in accordance with step 6. Repair the forward lift frame in accordance with a Bell approved repair before the next flight.

b. If there are no cracks, go to step 7.

6. Report the inspection results to Product Support Engineering (PSE) at productsuport@bellflight.com by providing the following information:

   a. In the e-mail **subject line** of the e-mail, include the following information:

      (1) The helicopter model.

      (2) The helicopter serial number.

      (3) The text ASB 429-24-66.

      (4) The name of the operator.

      (5) The airframe total time.

      (6) The text LIFT FRAME CRACKED.

      Example of e-mail subject line:
      429 (57001) – ASB 429-24-66 – Bell Textron Inc – 2500 hours – LIFT FRAME CRACKED.

   b. In the e-mail body, provide:

      (1) The gap measurements recorded in **PART I** step 2.e for all 7 screw hole locations of the applicable lift frame corner.

      (2) The attached structural repair request form with high quality photos of the cracks, their dimensions and their location.

7. If the FPI method was used, re-finish the inspected areas with two coats of epoxy polyamide primer (C-204).

8. Re-apply the anti-chafing tape (C-454) on the lift frame (1) lower flange where the seven hole positions shown in Figure 1 views B and C are located.

9. Install aft forward-lift frame covers (2 and 3) and forward-lift frame cover (4) (DMC-429-A-53-00-00-32A-720A-A).

10. Install the applicable interior panels (DMC-429-A-25-10-00-08A-720A-A and DMC-429-A-25-20-00-05A-720A-A).

11. Make an entry in the helicopter logbook and historical service records indicating compliance with **PART II** of this Alert Service Bulletin.

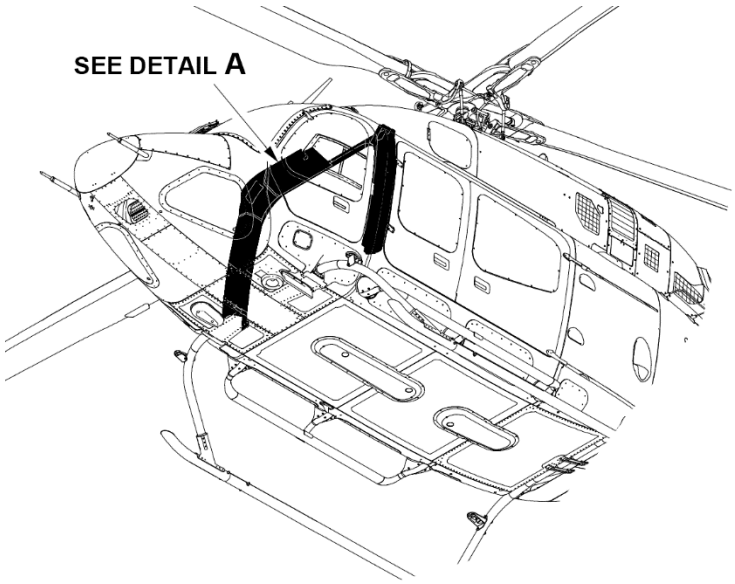

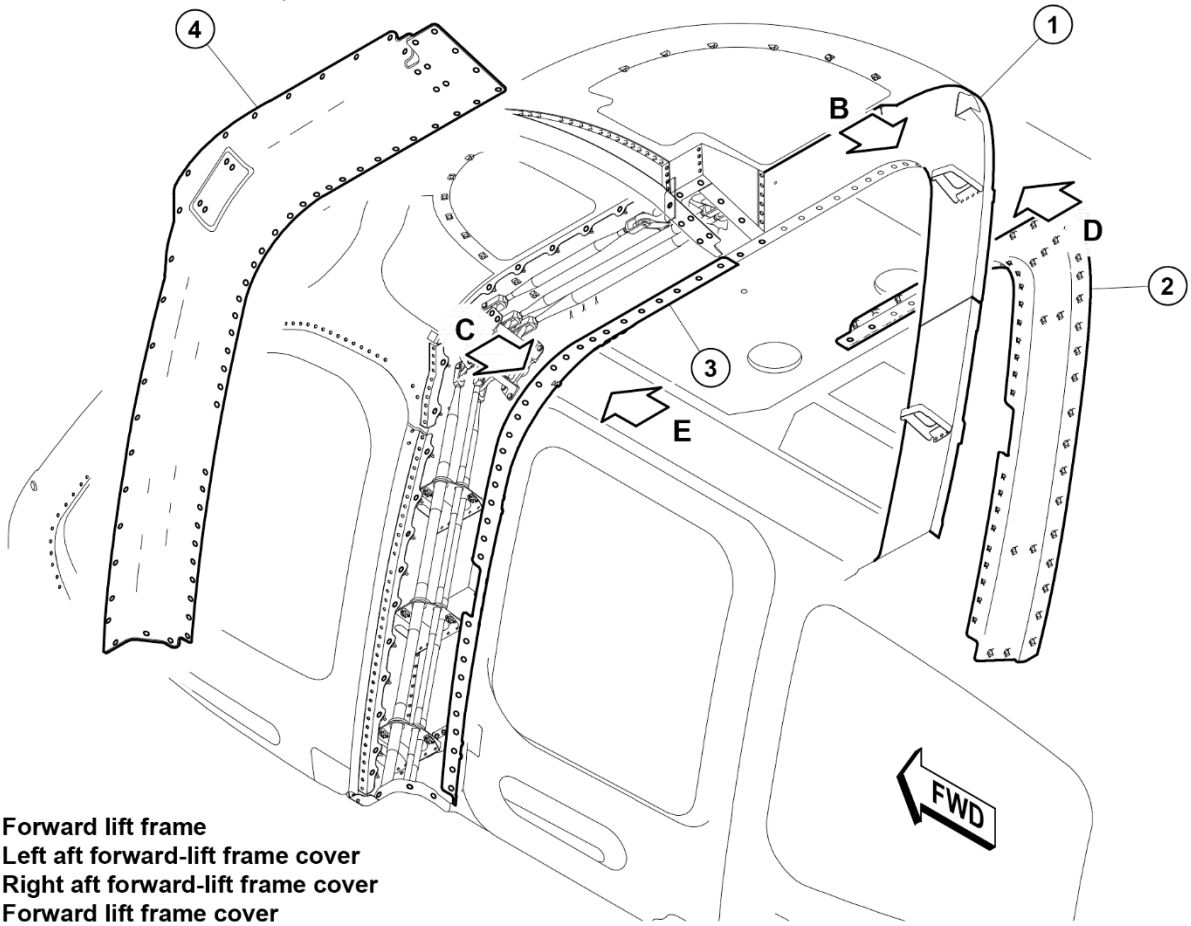

1. Forward lift frame
2. Left aft forward-lift frame cover
3. Right aft forward-lift frame cover
4. Forward lift frame cover

DETAIL A

24525_001a

Figure 1 – Forward Lift Frame and Covers Removal, Inspection, and Installation (Page 1 of 8)

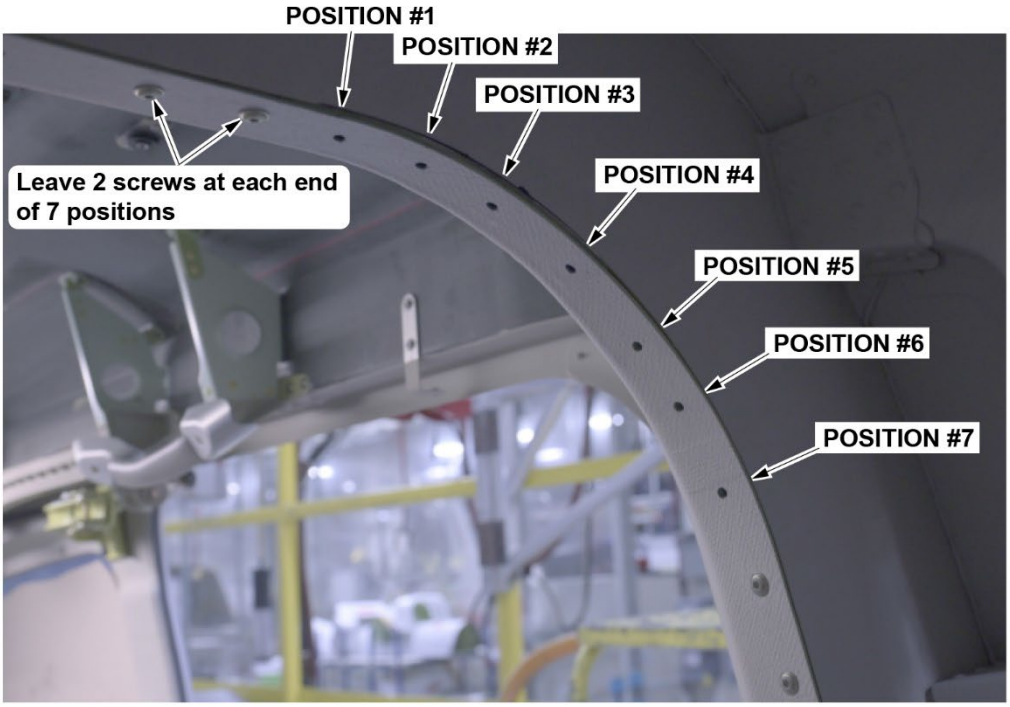

VIEW B
LEFT HAND CORNER
(LOOKING AFT)

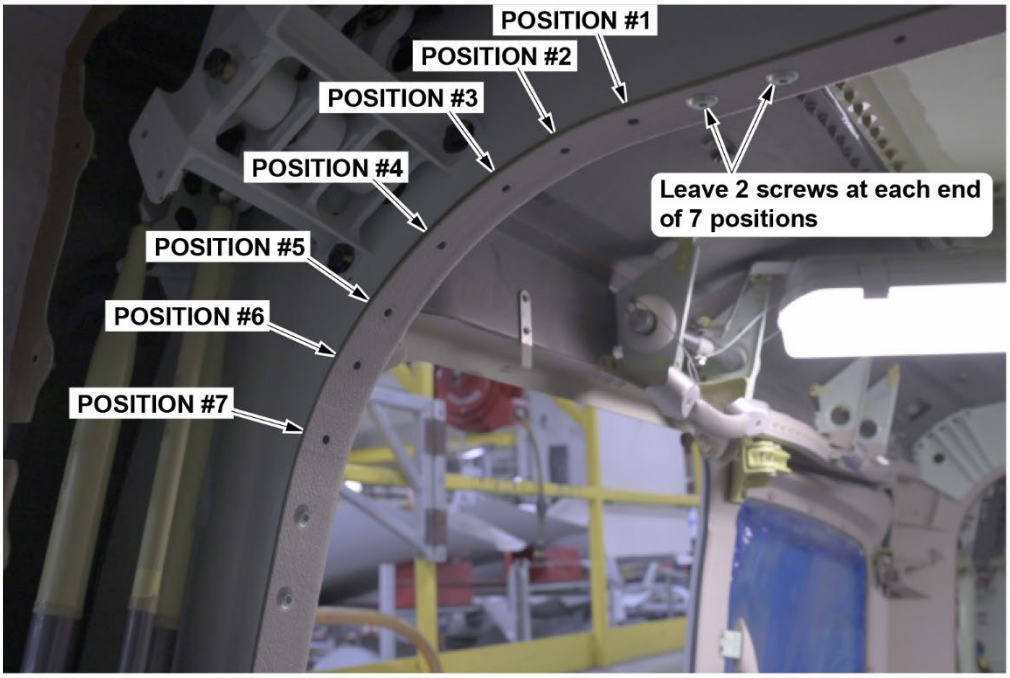

VIEW C
RIGHT HAND CORNER
(LOOKING AFT)

24525_001b

Figure 1 – Forward Lift Frame and Covers Removal, Inspection, and Installation (Page 2 of 8)

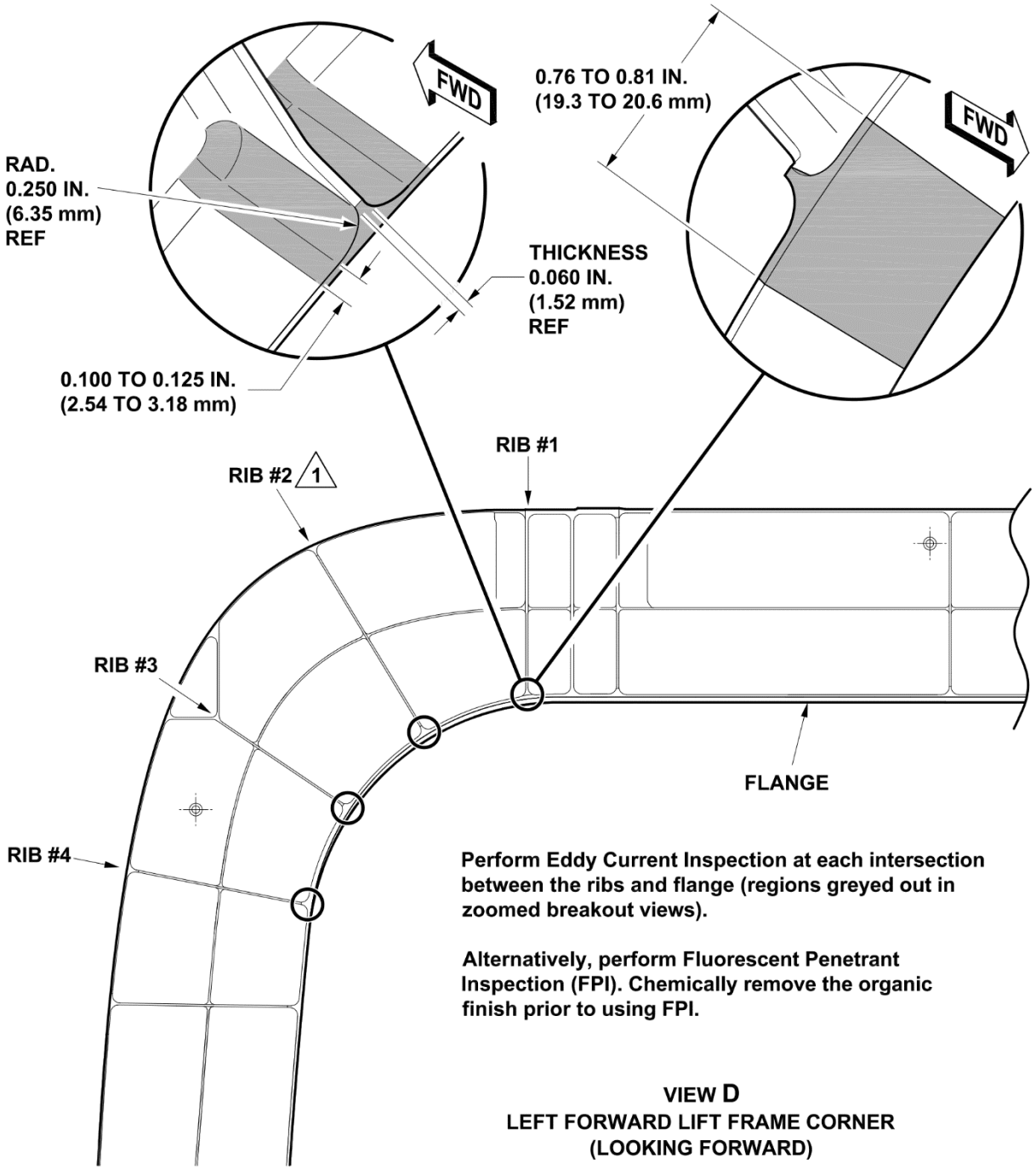

429-030-311-115 (57001 through 57012)
429-030-311-117 (57013 through 57040, 57046, 57051, 57056)

NOTE

1 Rib has a gusset riveted on one side. Therefore, only the radius on the opposite side as well as the flange face and lower surface need to being inspected.

24525_001c

Figure 1 – Forward Lift Frame and Covers Removal, Inspection, and Installation (Page 3 of 8)

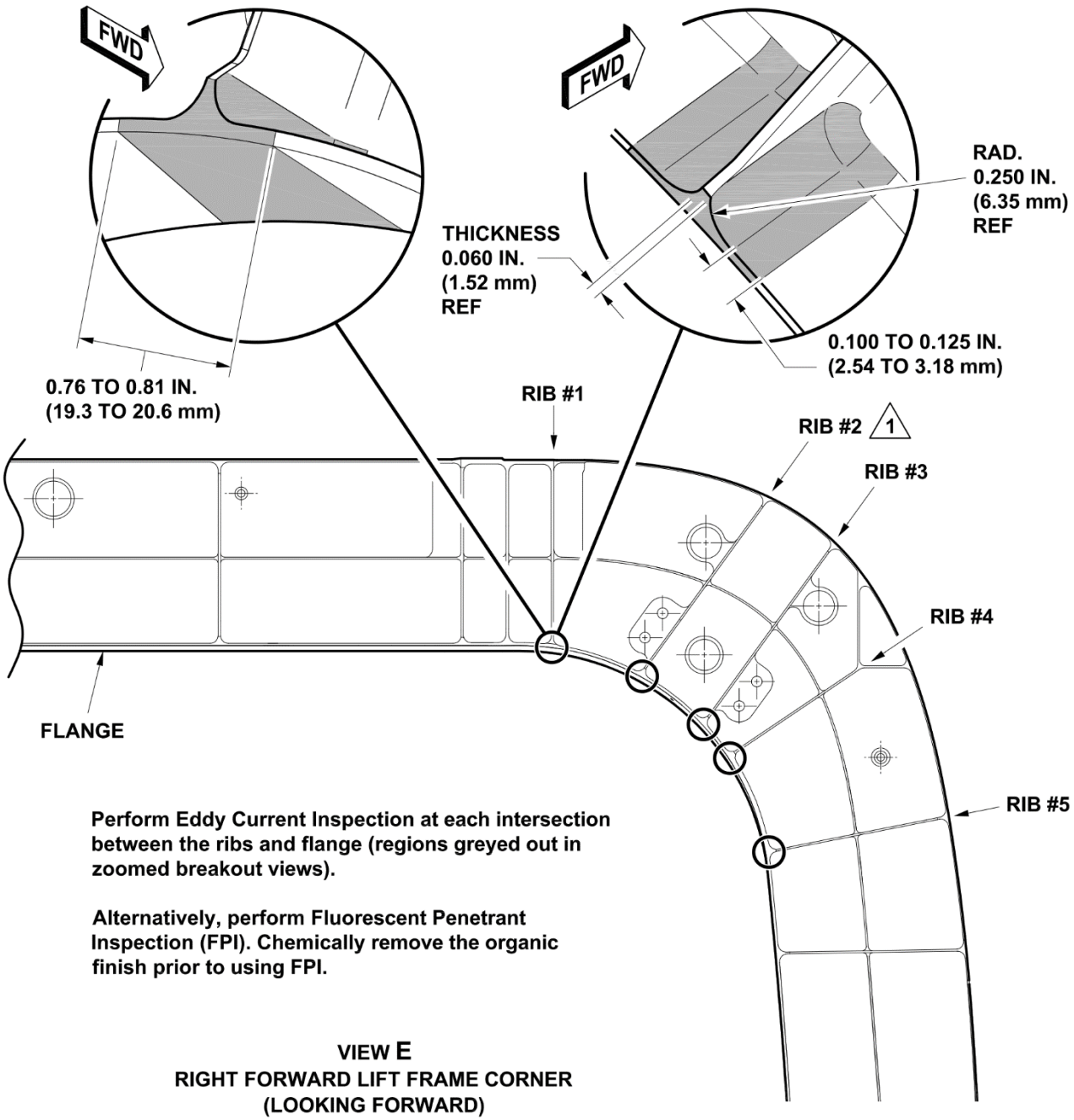

429-030-311-115 (57001 through 57012)
429-030-311-117 (57013 through 57040, 57046, 57051, 57056)

NOTE

1 Rib has a gusset riveted on one side. Therefore, only the radius on the opposite side as well as the flange face and lower surface need to being inspected.

24525_001d

Figure 1 – Forward Lift Frame and Covers Removal, Inspection, and Installation (Page 4 of 8)

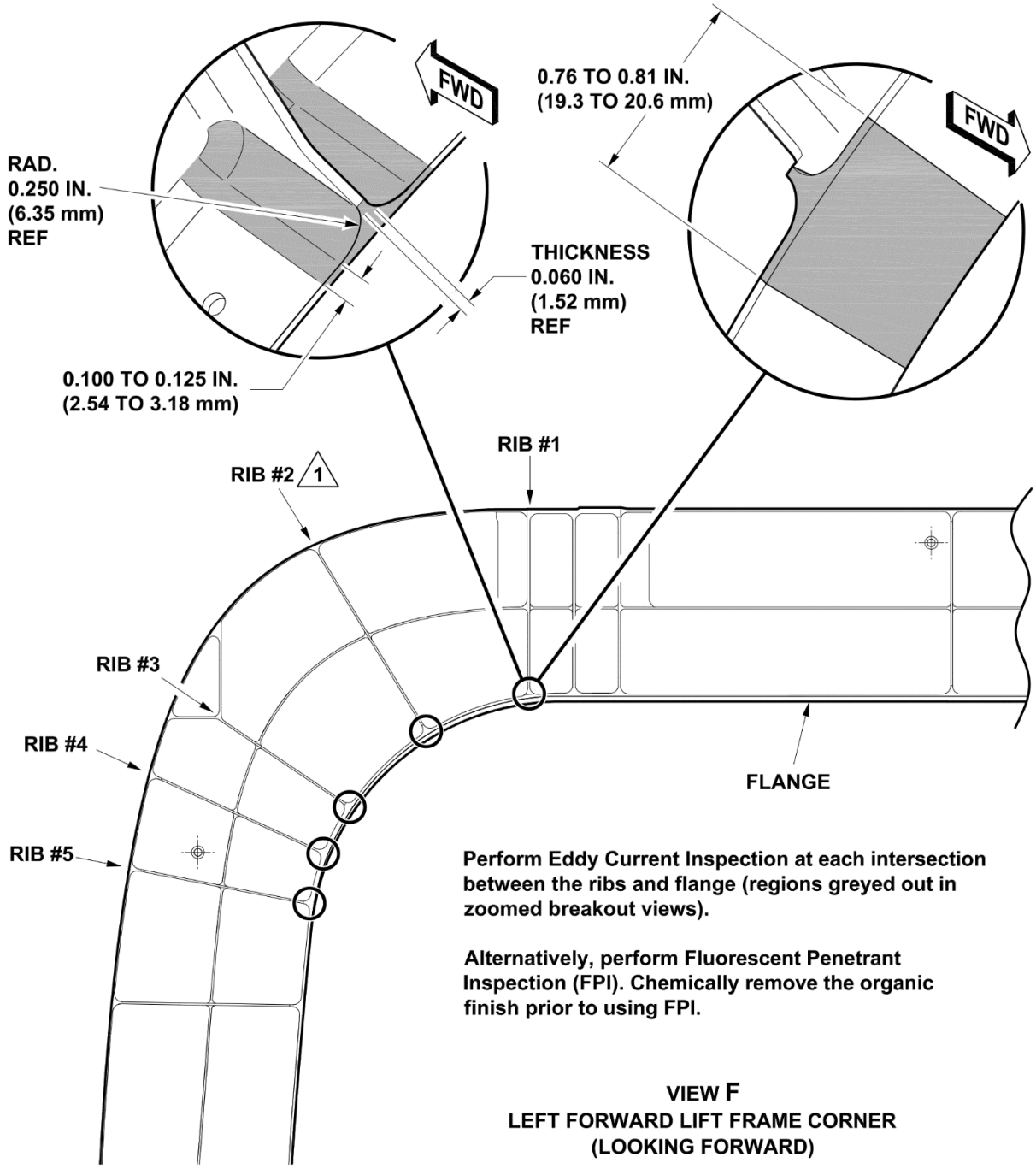

Perform Eddy Current Inspection at each intersection between the ribs and flange (regions greyed out in zoomed breakout views).

Alternatively, perform Fluorescent Penetrant Inspection (FPI). Chemically remove the organic finish prior to using FPI.

VIEW F
LEFT FORWARD LIFT FRAME CORNER
(LOOKING FORWARD)

429-030-311-119 (57041 through 57045, 57047 through 57050, 57052 through 57055, 57057 and sub)

NOTE

1 Rib has a gusset riveted on one side. Therefore, only the radius on the opposite side as well as the flange face and lower surface need to being inspected.

24525_001e

Figure 1 – Forward Lift Frame and Covers Removal, Inspection, and Installation (Page 5 of 8)

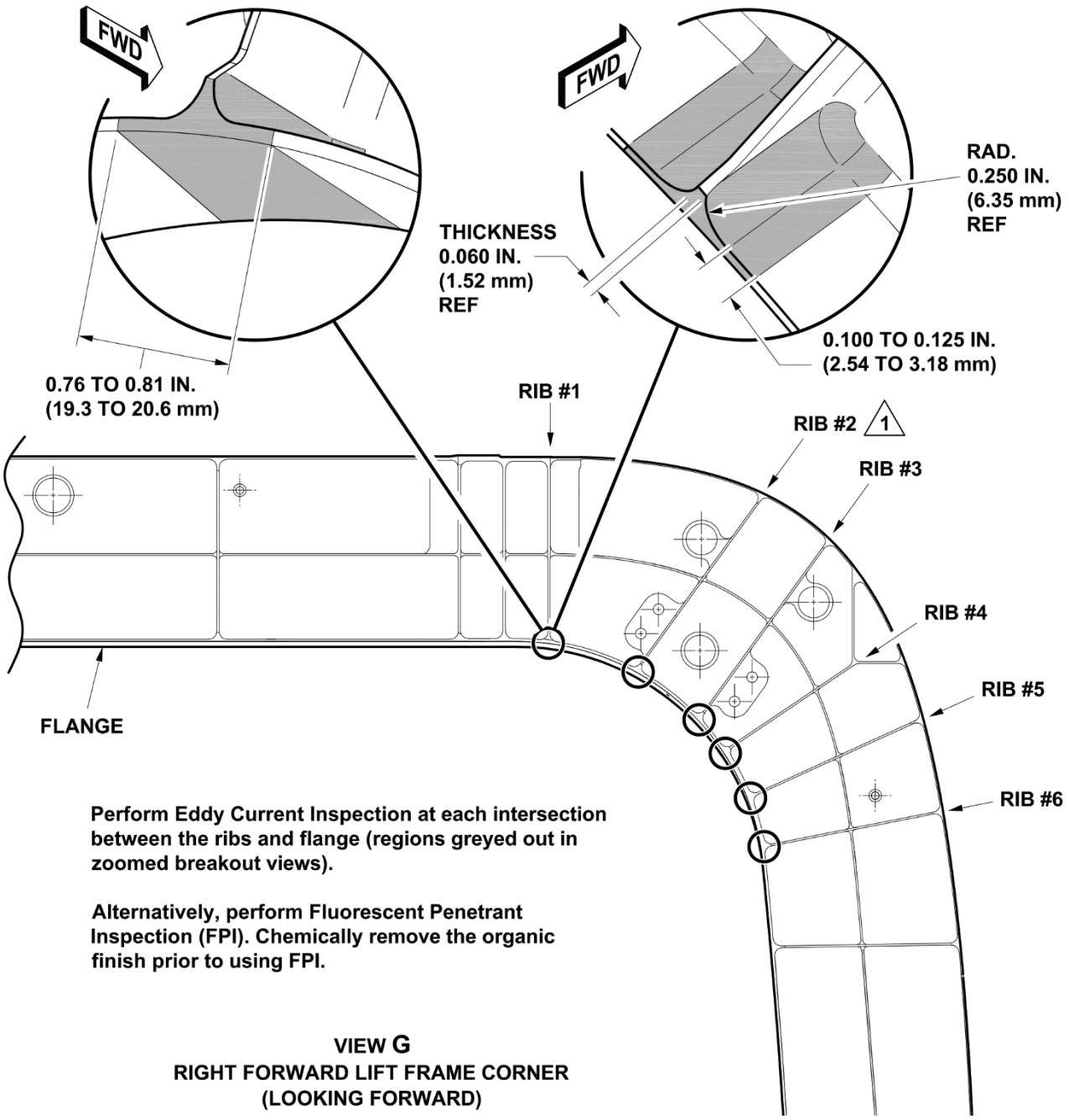

Perform Eddy Current Inspection at each intersection between the ribs and flange (regions greyed out in zoomed breakout views).

Alternatively, perform Fluorescent Penetrant Inspection (FPI). Chemically remove the organic finish prior to using FPI.

VIEW G
RIGHT FORWARD LIFT FRAME CORNER
(LOOKING FORWARD)

429-030-311-119 (57041 through 57045, 57047 through 57050, 57052 through 57055, 57057 and sub)

NOTE

1. Rib has a gusset riveted on one side. Therefore, only the radius on the opposite side as well as the flange face and lower surface need to being inspected.

24525_001f

Figure 1 – Forward Lift Frame and Covers Removal, Inspection, and Installation (Page 6 of 8)

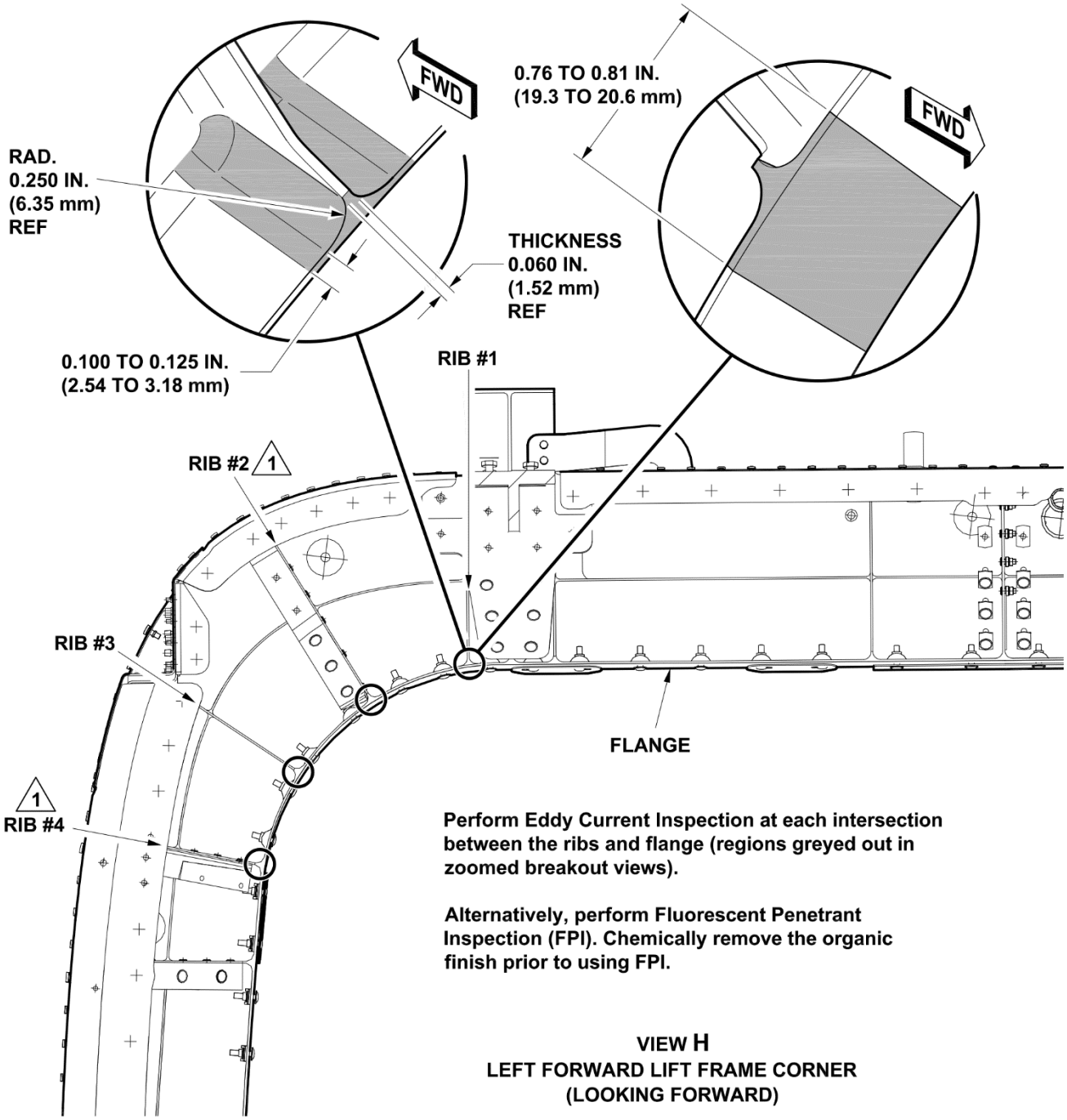

Perform Eddy Current Inspection at each intersection between the ribs and flange (regions greyed out in zoomed breakout views).

Alternatively, perform Fluorescent Penetrant Inspection (FPI). Chemically remove the organic finish prior to using FPI.

VIEW H
LEFT FORWARD LIFT FRAME CORNER
(LOOKING FORWARD)

FIELD REPAIRS 09RI-053 (57006), 09RI-048 (57008)

NOTE

1 Rib has a gusset riveted on one side. Therefore, only the radius on the opposite side as well as the flange face and lower surface need to being inspected.

24525_001g

Figure 1 – Forward Lift Frame and Covers Removal, Inspection, and Installation (Page 7 of 8)

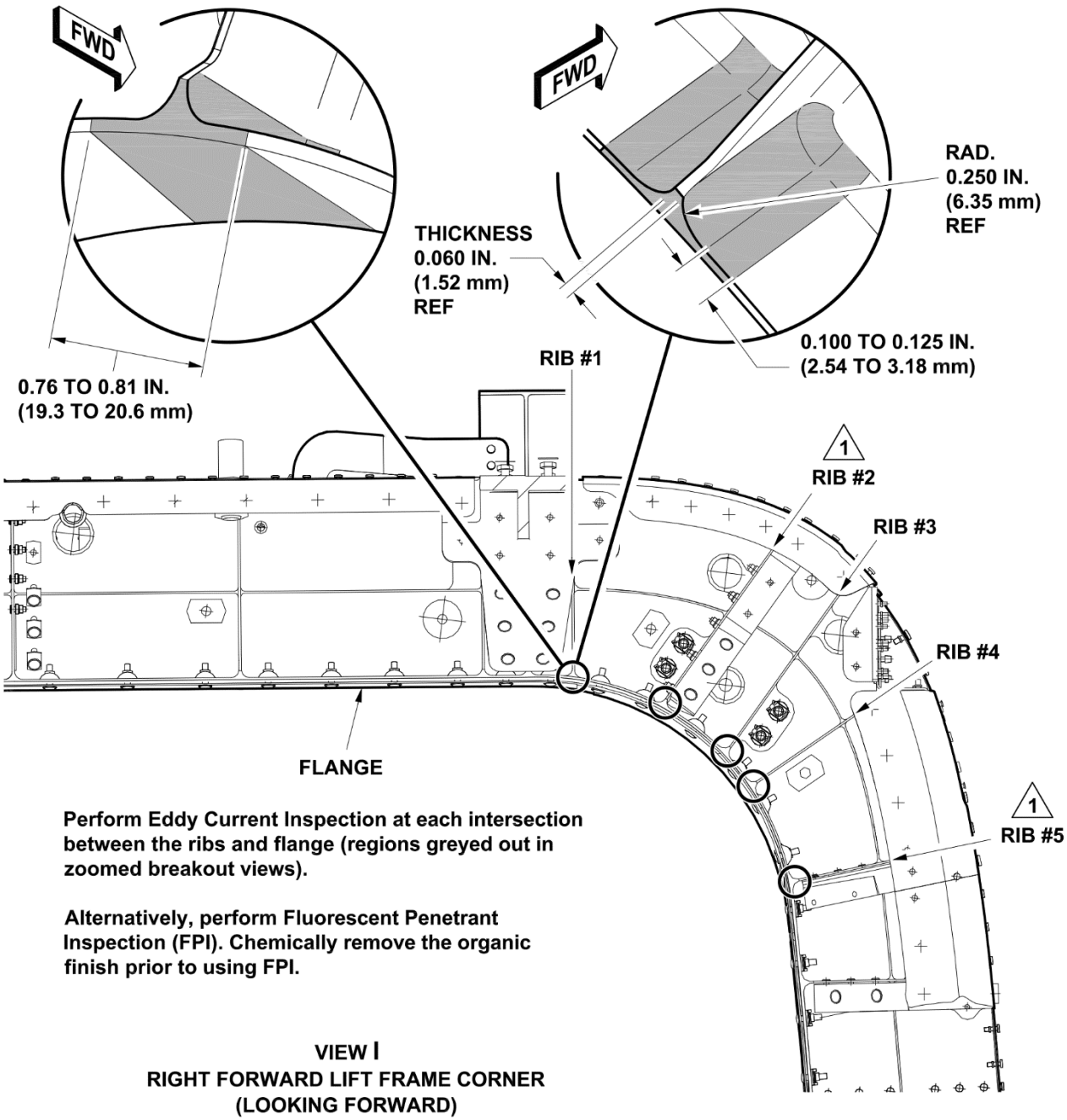

FIELD REPAIRS 09RI-053 (57006), 09RI-048 (57008)

NOTE

1 **Rib has a gusset riveted on one side. Therefore, only the radius on the opposite side as well as the flange face and lower surface need to being inspected.**

24525_001h

Figure 1 – Forward Lift Frame and Covers Removal, Inspection, and Installation (Page 8 of 8)

Table 2 – Eddy Current Qualified Facilities

Facility	Address	City	State	Country	Email
Aircraft Structural Inspections	108A West Washington	Mountain View	AR	USA	beaundt@gmail.com, cme4ndt@gmail.com, tom.summers1979@yahoo.com, stevexray@gmail.com, NCertProgram@txtav.com
Canyon State Inspection - Chandler	103 S. Southgate	Chandler	AZ	USA	chandler@csindi.com, tucson@csindi.com, ldolan6@hotmail.com,
Canyon State Inspection - Tucson	3625 East Ajo Way	Tucson	AZ	USA	c.dolan@csindi.com, tucson@csindi.com, ldolan6@hotmail.com
CTC Services, Inc.	3144 Venture Dr.	Lincoln	CA	USA	mjstoll@ctcservicesinc.net, twoods@ctcservicesinc.net, jbanford@ctcservicesinc.net, kjbenbrook@ctcservices.net
Level III NDT, Inc.	27720 Industrial Blvd	Hayward	CA	USA	dave.arms@sbcglobal.net
Aerohoff Inspection Services, Inc.	5019 Caspian Drive	Oceanside	CA	USA	sales@aerohoff.com
ND Testing Inc	11473 Pacific Ave	Fontana	CA	USA	EricM@NDTesting.com, JosephD@NDTesting.com, DanT@NDTesting.com
West Star Aviation - CO	796 Heritage Way	Grand Junction	CO	USA	mmedina@wsa.aero, llentz@wsa.aero, dkrogman:@wsa.aero, krice@wsa.aero
Mountain Aviation LLC	9656 Metro Airport Ave.	Broomfield	CO	USA	jcarpenter@mountainaviation.com, NCertProgram@txtav.com
Intermountain Testing Company, LLC	2965 S Shoshone Street	Englewood	CO	USA	Joe@intermountaintesting.com, Robbie@intermountaintesting.com,
Tailwind Inspection, Inc. - CT	70-C King Spring Road	Windsor Locks	CT	USA	shad@tailwindinspection.com, rico@tailwindinspection.com, NCertProgram@txtav.com

Facility	Address	City	State	Country	Email
Velocity Maintenace Solutions, LLC	6DRBA Way	New Castle	DE	USA	rsnyder@velocitymx.com, fclark@velocitymx.com, NDT@velocitymx.com, sembler@velocitymx.com, bweiss@velocitymx.com
Power Aviation Inc.	8440 Tradeport Drive	Orlando	FL	USA	ndt@poweraviationinc.com, poweraviationinc@aol.com, diana.pratt@poweraviationinc.com
E & I Aircraft	2801 NW 55th Court	Ft. Lauderdale	FL	USA	eandi@bellsouth.net, juang1073@hotmail.com, dfrione@enginsp.com, ephend@enginsp.com
NDT Solutions, Inc.	4044 N. 30th Ave.	Hollywood	FL	USA	diego@ndt-solutions.com, Sara@ndt-solutions.com, stevan@ndt-solutions.com,
SETAERO	5800 Miami Lakes Drive	Miami Lakes	FL	USA	david@setaero.com & info@setaero.com, victor.lopez@setaero.com, samuel.hurtado@setaero.com, angela@setndt.com,
S.E.A.L. Aviation, LLC	4090 SW 30 Avenue	Hollywood	FL	USA	jim@sealaviation.com, jerel@sealaviation.com, chiefinspector@sealaviation.com, jeremyrounds@sealaviation.com
Baron NDT, LLC	14000 Pecan Park Rd Ste 3	Jacksonville	FL	USA	mike@baronndt.com, shawn@baronndt.com,
Alpha NDT Inc	1006 East Ave	Clermont	Florida	USA	mminor@alphandtinc.com
Applied Technical Services, Inc. - GA	1049 Triad Court	Marietta	GA	USA	bpatience@atslab.com, rhoward@atslab.com, jhalsey@atslab.com, gdragano@atslab.com, jimj@atslab.com, NCertProgram@txtav.com
StandardAero Business Aviation Services, LLC - GA	1550 Hangar Rd.	Augusta	GA	USA	peter.weitz@standardaero.com, chris.bodine@standardaero.com, keith.moss@standardaero.com, james.gardner@standardaero.com
EPPS Aviation	1 Aviation Way	Atlanta	GA	USA	dlane@aerocenters.com, jjennings@aerocenters.com,

Facility	Address	City	State	Country	Email
Elliott Aviation of Des Moines LLC	2800 McKinley Ave.	Des Moines	IA	USA	tlauda@elliottaviation.com, spottebaum@elliottaviation.com, mnistler@elliottaviation.com, NCertProgram@txtav.com
Western Aircraft, Inc	4300 S. Kennedy St.	Boise	ID	USA	AdamY@westair.com, pauls@westair.com, jodyh@westair.com,
Empire Aerospace (Fed Ex A/C only)	11549 North Atlas Road,	Hayden	Idaho	USA	Carl.Coats@empireaerospace.com
West Star Aviation - IL	18 Terminal Dr.	East Alton	IL	USA	mcollum@wsa.aero, dnash@wsa.aero, jhardy@wsa.aero, jhall@wsa.aero
Elliott Aviation of the Quad Cities - IL	6601 74th Ave., Bldg. A	Milan	IL	USA	mnistler@elliottaviation.com, bengle@elliottaviation.com, jstaver@elliottaviation.com, gsahr@elliottaviation.com, mmenard@elliottaviation.com, trountree@elliottaviation.com
Hoosier Aircraft Accessory, Inc.	10274 Old National Rd.	Indianapolis	IN	USA	danrose@hoosieraircraft.com,
Paragon NDT, LLC	2210 S. Edwards Street	Wichita	KS	USA	jeremy.pemrick@paragonndt.com, jay.beckel@erisolutions.com, brandon.bourn@erisolutions.com, jeremy.pemrick@paragonndt.com,
Air Capital NDI LLC	4015 W May St	Wichita	KS	USA	quality@aircapitalndi.com, nate.ferguson@aircapitalndi.com -
Duncan Aviation - MI	15745 S. Airport Road	Battle Creek	MI	USA	Shawn.andrews@duncanaviation.com, casey.fix@duncanaviation.com
Aircraft Inspection Services, Inc.	4128 40th Street SE	Grand Rapids	MI	USA	Doug.B@airndt.com, dadams@airndt.com, info@airndt.com
Signature TechnicAir - MN	529 Eaton St.	St. Paul	MN	USA	terry.speight@technicair.com, shane.muller@signatureflight.com, tom.thunstrom@technicair.com, greg@ndi-co.com, NCertProgram@txtav.com
NDI Consultants, Inc.	14608 Felton Court	Apple Valley	MN	USA	info@ndi-co.com, greg@ndi-co.com, dan@ndi-co.com

Facility	Address	City	State	Country	Email
Elliott Aviation of Minneapolis, LLC	Flying Cloud Airport	Eden Prairie	MN	USA	mnistler@elliottaviation.com, lharting@elliotaviation.com, rborgerding@elliottaviation.com, jsolberg@elliottaviation.com, NCertProgram@txtav.com
Northern NDT LLC	22015 Brenly Way	Rogers	MN	USA	Marknistler1968@Yahoo.com, NCertProgram@txtav.com
St. Louis Testing Laboratories, Inc.	2810 Clark Ave.	St. Louis	MO	USA	jbloch@labinc.com, rsinn@labinc.com, dbaumer@labinc.com, NCertProgram@txtav.com
Neptune Aviation Services, Inc.	#2 Corporate Way	Missoula	MT	USA	elehuta@neptuneaviation.com, clynn@neptuneaviation.com, pblouin@neptuneaviation.com, elehuta@neptuneaviation.com,
Signature TechnicAir - NC	1030 PTI Drive	Greensboro	NC	USA	christopher.page@technicair.com, steve.everhart@technicair.com, mike.blackman@technicair.com,
ETI Ewer Testing & Inspection Inc.	1131 South 22nd St.(58504)	Bismark	ND	USA	qewer@etitesting.com, larry@etitesting.com,
Duncan Aviation - NE	3701 Aviation Road	Lincoln	NE	USA	brian.young@duncanaviation.com, casey.fix@duncanaviation.com, ndt.shop@duncanaviation.com NCertProgram@txtav.com
Jet East dba West Star Aviation	18 West Piper Ave	Trenton	NJ	USA	sean.walty@wsa.aero, jerry.paul@wsa.aero, Robert.fischer@wsa.aero
Structural Testing Systems, Inc.	2221 Smithtown Avenue	Ronkonkoma	NY	USA	jack@stsndt.com ndt@aol.com Sue@stsndt.com
Mobile NDT Services	12 Leeds Blvd	Farmingville	NY	USA	mobilendtservices@gmail.com, ndt@aol.com,

Facility	Address	City	State	Country	Email
Toledo Jet Center, LLC	NDI Manager	Swanton	OH	USA	calejones@toledojet.com, davecorwin@toledojet.com, davecorwin@toledojet.com, ericzeintek@toledojet.com
Nextant Aerospace (Constant Aviation)	18601 Cleveland Pkway Dr	Cleveland	OH	USA	sehrhart@nextantaerospace.com, aockwell@nextantaerospace.com, jrudy@nextantaerospace.com, modonnell@nextantaerospace.com, mcarroll@nextantaerospace.com
Tailwind Inspection, Inc. - OK	3260 N. Sheridan Road	Tulsa	OK	USA	rico@tailwindinspection.com, becky@tailwindinspection.com, ryan@tailwindinspection.com, NCertProgram@txtav.com
Acuren Inspection, Inc. - WA	8155 S.E. Deer Creek Lane	Milwaukie	OR	USA	jerry.nast@acuren.com, jnast@acuren.com, jmaerk@acuren.com, croderos@acuren.com
NDE Professionals, Inc.	13339 NE Airport Way	Portland	OR	USA	jeff@qnpi.com, kristen@qnpi.com, brad@qnpi.com,
Applied Technical Services, Inc. - SC	214 Pelham Davis Circle	Greenville	SC	USA	mwalton@atslab.com, rruggles@atslab.com, jtitano@atslab.com,
West Star Aviation - TN	5900 Lovell Field Loop	Chattanooga	TN	USA	mdowd@wsa.aero, jparson@wsa.aero, cdunston@wsa.aero
S&S Testing	115 Holloway Square	Smyrna	TN	USA	r_jstanl@bellsouth.net, Drln1114@aol.com,
Apex Inspections Incorporated	12901 Nicholson Rd	Farmers Branch	TX	USA	Clientservices@apexinspections.com, ericshaw@apexinspections.com, mikedonihoo@apexinspections.com, rachelV@apexinspections.com, amber@apexinspections.com, accounting@apexinspections.com
JETS, Inc.	1943 Old Denton Road	Carrollton	TX	USA	ryan@jetsinc.net, todd@jetsinc.net, chris@jetsinc.net, NCertProgram@txtav.com

Facility	Address	City	State	Country	Email
Tailwind Inspection, Inc. - TX	3331 Towerwood Drive	Farmers Branch	TX	USA	joe@tailwindinspection.com, rico@tailwindinspection.com, NCertProgram@txtav.com
Aviation Inspection Services	200 Aviation Way	Ft. Worth	TX	USA	Barry@AviationInspection.Net
AWI NDT, LLC.	332 Harbour View	Pipe Creek	TX	USA	nstaples@aogserv.com, tstaples@aogserv.com, mike.benson@stsndtservices.com, NCertProgram@txtav.com
BRL NDT Services	10860 Vandale Street	San Antonio	TX	USA	NCertProgram@txtav.com
Spitfire Aerospace Services, Inc.	281 Co Rd 693	Buffalo Gap	TX	USA	heath@Spitfireaerospace.net, NCertProgram@txtav.com
Duncan Aviation-UT	262 S 3800 W	Provo	UT	USA	Ray.Vieselmeyer@duncanaviation.com, brian.young@duncanaviation.com
NDT Inspect-Air, Inc.	4557 96th Street	Franksville	WI	USA	kmoran@ndtinspect-air.com, wmoran@ndtinspect-air.com,
Aviation NDT Services, Pty. Ltd.	Gate 24 Operations Road	Melbourne	Victoria	Australia	ttuck@aviationndt.com.au, info@aviationndt.com.au,
Aeronautical Inspection Services Pty. Ltd.	C2 / 101 Rookwood Road	Sydney	NSW	Australia	aisndt@icloud.com, aerocompliance@gmail.com, j_maitland@mac.com
Aerospace NDI Pty. Ltd.	68 May Holman Drive Bassendean	Perth	Western Australia	Australia	brendan@aerospacendi.com, tony@aerospacendi.com, phil@aerospacendi.com, qsm@aerospacendi.com, richard@aerospacendi.com, allan@aerospacendi.com,
Austrian Aircraft Corporation GmbH (AAC)	Flughafenstrass e 1	Horsching		Austria	a.coufal@aac.at, r.fellner@aac.at, kollmann-ndt@aon.at, info.linz@aac.at, k.traunfellner@aac.at, w.wittmann@aac.at, b.schramm@aac.at, NCertProgram@txtav.com

Facility	Address	City	State	Country	Email
Jet Aviation Vienna GmbH	Hangar 7	Schwechat		Austria	Heinz.Leonhartsberger@jetaviation.at, hakan.tin@jetaviation.at, sjoerd.heida@jetaviation.at, NCertProgram@txtav.com
WAA Luftfahrt GmbH	Flughafenstrass e 1 / Tor 3	Hoersching		Austria	platzer@weareaviation.com, reitzig@weareaviation.com
Tyrol Air Ambulance	Fuerstenweg 180	Innsbruck		Austria	Larissa.reuter@taa.at
Sabena Aerospace Engineering	Nondestructive Inspection Dept.	Zaventem	Brussels	Belgium	Luc.DeClerck@sabena-aerospace.com, ndt.bru@sabena-aerospace.com, stephane.burton@sabena-aerospace.com, marc.holbert@sabena-aerospace.com, NCertProgram@txtav.com
Compoende	Av. Dos Ipes,	Tremembe	Sao	Brazil	comercial@compoende.com.br, qualidade@compoende.com.br,
Embraend-Empresa Brasileira	Av. Marconi Issa. No. 300	Bairro Perobas	Sao Jose Da Lapa	Brazil	rt@embraend.com.br, diretoria@embraend.com.br,
Helipark Taxi Aero E Manutencao	Rua Fortunato Grilenzone 417	Sao Paulo	Sao Paulo	Brazil	comercial@helipark.net, leonardoarias@helipark.net
Acuren Group, Inc.	5301 Airport Road South	Richmond	British Columbia	Canada	ndt4flying@gmail.com apsouth@telus.net, NCertProgram@txtav.com
Execaire, A Division of I.M.P. Gp. Ltd. (YYZ)	2450 Derry Road East-HGR7	Mississauga	Ontario	Canada	John.Nother@innotech-execaire.com, jf.pilote@execaire.com, george.zarikos@execaire.com, eric.bisson@execaire.com, richard.desjardins@execaire.com, YYZ.NDT@innotech-execaire.com NCertProgram@txtav.com
Perimeter Aviation LP	626 Ferry Road	Winnipeg	Manitoba	Canada	dave.jarduck@perimeter.ca, kevin.hunter@perimeter.ca, brad.winchar@perimeter.ca, anthony.loft@perimeter.ca
Skyservice F.B.O. Inc. (Mississauga) YYZ	6120 Midfield Rd	Mississauga	Ontario	Canada	Chris_Brien@skyservice.com, paul_weeks@skyservice.com,

Facility	Address	City	State	Country	Email
Skyservice F.B.O. Inc. (Dorval) YUL	10105 Ryan Avenue	Dorval	Quebec	Canada	Chris_Brien@skyservice.com, Joe_Gallant@skyservice.com, simon_canuel@skyservice.com, Paul Weeks: VP of Maintenance
Cougar NDE Ltd.	91 Doran Crescent	Red Deer	Alberta	Canada	cougarnde@shaw.ca, colin@cougarnde.com,
Q1 Aviation Ltd.	7537 Kimbel Street	Mississauga	Ontario	Canada	Mark@Q1aviation.com, carlos@q1aviation.com
Kalspec NDT Services Inc.	2-418 Carpathia Road	Winnipeg	Manitoba	Canada	ekalish.kalspecndt@gmail.com,
Adarsh NDT Inc.	Unit# 230, 575 Palmer Road NE	Calgary	AB	Canada	Adarsh.kanwar@adarshndt.ca
Beijing Dingshi GA Technical Service Center	No.18, Huoyun Bei Road Capital Rd	Beijing		China	zhangyr@chinacfi.net, zhangyr@chinacfi.net, mengzy@chinacfi.net, 13681585202@163.com, yut@chinacfi.net,
Civil Aviation Flight University of China	Aircraft Repair & Overhaul Plant	Guanghan City	Sichuan Province	China	599044187@qq.com, 136877634@qq.com, nchuzmc@sina,com, 516649787@qq.com, fjxlchck@163.com, fxhck@vip.163.com
ATG s.r.o.	Touzimska 771	Prague		Czech Republic	tichy@atg.cz NCertProgram@txtav.com
Nordisk Svejse Kontrol A/S	Hammeren 5	Esbjerg Nord		Denmark	jjm@nskas.dk, fje@nskas.dk, jvc@nskas.dk,
AOG Inspection Limited	Unit 18B	Witney	Oxfords hire	England	edward@aoginspection.com, jennifer@aoginspection.com, david@aoginspection.com, sw.aeroeng@gmail.com, NCertProgram@txtav.com
TESTIA (NDT Expert)	18 Rue Marius Terce - BP13033	Toulouse	Haute-Garonne	France	martine.clauzolles@testia.com, Audrey.BILLAUT@testia.com, martine.clauzolles@testia.com, michael.barbeyrol@testia.com, frederic.thiallier@testia.com,

Facility	Address	City	State	Country	Email
Dusseldorf Citation Service Center GmbH	Flughafenstrasse 50	Dusseldorf	NRW	Germany	adadgar@txtav.com
Atlas Air Service AG	Otto-Lilienthal-Strasse 23	Ganderkesee	Lower Saxony	Germany	NDT@aas.ag
Aerospace Management and Support PCC (AMS AERO)	78, Gounari Str, 16561	Glyfada		Greece	san@amsaero.eu, ceo@amsaero.eu, VAP@amsaero.eu, sales@amsaero.eu, sales@amsaero.eu
Aviation NDT Bros,Kft	Madach Utca 17	Peteri		Hungary	tamas.hetey@ndtbros.hu, attila.hetey@ndtbros.hu,
AVITR Operations and Maintenance LLP	E3/504, Gaurav City CHS. Ltd.	Thane	Maharashtra	India	sales@aoml.org
CND Service, (Controlli Non Distruttivi) srl	Maintenance Manager	Roma	Civitavecchia	Italy	cndpart145@gmail.com, u.giosafatto@cndservice.it, f.dantonio@cndservice.it, cndstefano@gmail.com
Okayama Air Service Co., Ltd.	673 Urayasuminami-machi	Okayama	Okayama	Japan	t.shoda@air-oas.co.jp, y.tanimura@air-oas.co.jp, h.takamori@air- oas.co.jp, c.hirano@air-oas.co.jp,
Fuji Business Jet Co.	Sakaguchi 3520-11	Makinohara Shi	Shizuoka	Japan	mochizuki.k@fuji-businessjet.co.jp
TailWind Solutions Ltd.	PO Box 45472-00100	Nairobi	Kenya	Kenya	karan@tailwindafrica.co.ke
Sharp Technics K Co., Ltd	Unseo-dong 2840-23 Jung-gu	Incheon City	Korea	Korea	jdlee@sharptechnics.co.kr, NCertProgram@txtav.com
Testia Mexico S de RL de CV	Av. Fray Luis de Leon 8051, Oficina 9	Queretaro	Queretaro	Mexico	alberto.zamorano@testia.com, marc.mahe@testia.com, Nicolas.fournier@testia.com, ruben.garcia@testia.com, CALDERON@testia.com,

Facility	Address	City	State	Country	Email
Compoende Aeronautica del Paraguay S.A.	Autopista Silvio Pettirossi 555	Luque	Dep. Central	Paraguay	info@compoende.com.py, compoende@compoende.com.br,
JAT Tehnika Ltd/ Prince Aviation	Attn: T. Samardzic - JAT NDI/S. Kragojevic - Maint. Manager - Prince	Belgrade	Serbia	Serbia	Tatjana.Samardzic@JAT-Tech.RS, sk@princeaviation.com, quality- ndt@jat-tech.rs
HBBH Aviation & Engineering Services K.S	Ivanska cesta 83	Bratislava	Ruzinov	Slovakia	paukovits@hbbh-aviation.com, backhofner@hbbh-aviation.com, office@hbbh-aviation.com
JAT/Tehnika d.o.o/ I2I-145 d.o.o	ZGORNJI BRNIK 130J	ZGORNJI BRNIK		Slovenia	dalibor@i2i.si
Unit Inspection Aviation Services	Hangar Z3	Johannesburg	Gauteng Province	South Africa	nicwan@tiscali.co.za, nick@amtsa.co.za, leon@amtsa.co.za, unit.inspection@amtsa.co.za,
Korean Air	260 Haneul Gil, Kangseo Gu	Seoul		South Korea	joonghwankim@koreanair.com, selqaqal@koreanair.com, dsyim@koreanair.com, krjang@koreanair.com, sjhong@koreanair.com
SGS Tecnos, S.A.	Trespaderne 29	Madrid		Spain	joseantonio.andrade@sgs.com, PedroManuel.Tortosa@sgs.com, ext.esmeralda.delgadojimenez@sgs.com
Ingenieria Semasa S.A.	C/ Berlin 27	Torres de la Alameda	Madrid	Spain	srosas@semasamro.com, sergio@semasamro.com, agarcia@semasamro.com, asanchez@ingenieriasemasa.com, dfernandez@semasamro.com, lperez@ingenieriasemasa.com, Quality Manager @ quality@semasamro.com, Business development manager @ dromero@semasamro.com,

Facility	Address	City	State	Country	Email
Force Aerospace Testing AB	Hasslogatan 2B	Vasteras	Goteborg	Sweden	urban.klang@kiwa.com, stefan.r.andersson@kiwa.com, johan.soderqvist@kiwa.com, urban.klang@force.aero ukl@force.aero
SR Technics Switzerland Ltd.	Flughofstrasse	Zurich-Flughafen	ZH	Switzerland	andreas.wuest@srtechnics.com, NDT_ZRH@srtechnics.com, christian.duerager@srtechnics.com
Dassault Aviation Business Services S.A (TAG Maintenance Services S.A.)	20 Chemin des Papillons	Geneva	Geneva	Switzerland	DABS-quality@dassault-business.com, dsegura@dassault-business.com, jpape@txtav.com
Jet Aviation Basel Switzerland	PO Box 214	Basel-Euro Airport	Basel	Switzerland	Frederic.WestpalmvanHoorn@jetaviation.com, Baptiste.Vanobberghen@jetaviation.com, andresgallego.yuste@jetaviation.com,
Zurich Citation Service Center GmbH	Bimenzaeltenstrasse	Kloten	Zurich	Switzerland	rmueller@txtav.com
Thai Airways-Mjets Maintenance			Bangkok	Thailand	fsievers@mjets.com, tweekeat.p@thaiairways.com
Rijnmond Air Services BV	Rotterdam Airportplein 54	Rotterdam	Zuid- Holland	The Netherlands	info@rasnl.com, wbosma@rasnl.com, quality@rasnl.com, NCertProgram@txtav.com
Threshold Inspection and Application Testing BV (TiaT)	SCHERPDEEL 32		ROOSE NDAAL	The Netherlands	davy.wevers@tiat.nl, peter.vanharen@tiat.nl

Facility	Address	City	State	Country	Email
Turkish Technic, Inc. - Emair	Sabiha Gokcen International Airport	Istanbul		Turkey	myorulmaz@thy.com, isunaoglu@thy.com, ekavrar@thy.com, cevatyazici@thy.com, Mroeikiz@thy.com, NCertProgram@txtav.com
Applus UK Ltd.	Inspection House - NDT Dept.	Reigate	Surrey	UK	todd.parsons@applusaerospace.co.uk, darren.ghazaleh@applusaerospace.co.uk, nicole.hawkins@applusaerospace.co.uk, steven.whiting@applusaerospace.co.uk, graham.mccully@applusaerospace.co.uk
Brinkley Aerospace	Unit 1, Montgomery Way	Biggleswade	Bedford shire	UK	Quality@brinkleyaerospace.com, ndt@brinkley-propeller.com, gordon@am-ndt.com,
Morgan Ward NDT Limited	Dale Road	High Peak	Derbyshire	UK	ben.wright@morganward.co.uk, Admin@morganward.co.uk, quality@morganward.co.uk, sandra.cornthwaite@morganward.co.uk, simon@morganward.co.uk, accounts@morganward.co.uk,