A Textron Company

ALERT SERVICE BULLETIN **412-25-207**

PSL # 3121

15 June 2026

MODEL AFFECTED: **412EP**

SUBJECT: **ENGINE N1 CONTROL CABLE INSTALLATION, IMPROVEMENT OF, PHASE II.**

HELICOPTERS AFFECTED: **Serial numbers 39101 through 39142, 39150, 39151 and 39158.**

[Serial number 39143 through 39149, 39152 through 39157, and 39159 through 39999 will have the intent of this bulletin accomplished prior to delivery.]

COMPLIANCE: Within the next 600 flight hours/12 months, whichever occurs first, after the release date of this bulletin.

DESCRIPTION:

Bell has determined that the current installation of the engine N1 control cables 7-46300-1 and 7-46300-2 require additional support at multiple locations along their routing. This bulletin mandates the installation of additional brackets to ensure adequate support and revises the clamping arrangement of the N1 control cable assemblies to improve the installation.

ASB 412-24-200 introduced certain changes to the N1 control cable installation. This ASB addresses additional locations within the N1 control cable installation.

Applicability of this bulletin to any spare part shall be determined prior to its installation on an affected helicopter.

APPROVAL:

The engineering design aspects of this bulletin are FAA approved.

CONTACT INFO:

For any questions regarding this bulletin, please contact:

Bell Product Support Engineering
Tel: 1-450-437-2862 / 1-800-363-8023 / productsupport@bellflight.com

MANPOWER:

Approximately 16 man-hours are required to complete this bulletin. This estimate is based on hands-on time and may vary with personnel and facilities available.

WARRANTY:

Owners / Operators of Bell Helicopters who comply with the instructions in this bulletin will be eligible to receive replacement parts and labor as applicable, listed in the bulletin. The https://MyBell.com portal allocates specific warranty entitlement for an aircraft by serial number. The Product Service Letter (PSL) number which is listed below the bulletin number on the introduction page is going to be required as an input when submitting a claim on the Bulletins Tab for replacement parts and labor.
If you receive an ASB or TB that does not have a PSL number, then there is no warranty entitlement for that bulletin.

Labor entitlement: Yes $1,760.0 USD

To receive parts, labor, under warranty:

- Comply with the instructions contained in this Bulletin no later than the specified compliance date. Failure to file a PSL claim before the compliance date will result in no warranty coverage.

NOTE: A user guide on how to submit a claim can be found here: How to Submit PSL Bulletin Claims.

MATERIAL:

Required Material:

The parts listed below are part of the convenience kit CA-412-25-207. The kit **CA-412-25-207** is required for the accomplishment of this bulletin and may be obtained through your Bell Supply Center.

Part Number	Nomenclature	Qty (Note)
412-030-460-101	Doubler	1
412-060-715-119	Bracket Assy	1
412-060-715-123	Bracket Assy	1
412-060-715-127	Bracket	1
412-060-715-129	Shim	1
90-002C3	Nut	1
AS21919WCH04Y	Clamp, Loop	4
AS21919WCH05Y	Clamp, Loop	4
MS2047T4-3-5	Rivet	4
MS2047T4-5	Rivet	2
MS20615-4M5	Rivet	1
MS20615-4M5R	Rivet	1
MS21043-3	Nut	1
MS21043-4	Nut	4
MS27039C4-16	Screw	4
NAS1057W3-050	Spacer	1
NAS1057W3-160	Spacer	1
NAS1149C0332R	Washer	5
NAS1149C0463R	Washer	8
NAS1149CN532R	Washer	1
NAS1149CN832R	Washer	1
NAS1738M4-1	Rivet	4
NAS1738M4-3	Rivet	5
NAS1802-3-15	Screw	1
NAS1802-3-34	Screw	1
NAS1802-3-8	Screw	2
NAS9307M-5-03	Rivet	1
NAS1802-3-8	Screw	2
NAS9307M-5-03	Rivet	1

The parts listed below are only required if the aircraft is equipped with the fuel provision retrofit kit 412-706-112-125. If required for the accomplishment of this bulletin these parts may be obtained through your Bell Supply Center.

Part Number	Nomenclature	Qty (Note)
212-060-668-003	Tube Assy	1
AS21919WDG08Y	Clamp	1
NAS1801-3-26	Screw	2
NAS43DD3-52N	Spacer	1
NAS43DD3-32N	Spacer	1
MS21042L3	Nut	1

Consumable Material:

The following material is required to accomplish this bulletin, but may not require ordering, depending on the operator's consumable material stock levels. This material may be obtained through your Bell Supply Center.

Part Number	Nomenclature	Qty (Note)	Reference *
2010-05919-01	Sealing compound, AMS 3374 Type 1	6 OZ (1)	C-353

* C-XXX numbers refer to the consumables list in the BHT-ALL-SPM, Standard Practices Manual

NOTE 1: Quantity indicated is the format that the product is delivered in. Actual quantity required to accomplish the instructions in this bulletin may be less than what has been delivered.

SPECIAL TOOLS:

None required.

WEIGHT AND BALANCE:

Not affected.

ELECTRICAL LOAD DATA:

Not affected.

REFERENCES:

BHT-412EPX-IPBS Illustrated Parts Breakdown Supplement
BHT-412EPX-MMS Maintenance Manual Supplement
ASB 412-24-200 ENGINE N1 CONTROL CABLE INSTALLATION, IMPROVEMENT OF.

412-704-109-103 Rev A Retrofit Kit Drawing (Bell internal reference only)

PUBLICATIONS AFFECTED:

BHT-412EPX-IPBS Illustrated Parts Breakdown Supplement
BHT-412EPX-MMS Maintenance Manual Supplement

ACCOMPLISHMENT INSTRUCTIONS:

1. Prepare the helicopter for maintenance.

2. Gain access to the forward engine compartment bulkhead panel assembly, refer to Figure 1, section A-A.

3. Remove and discard existing attaching hardware (1, section A-A, view B section D-D and section E-E detail H).

4. Remove and discard existing attaching hardware (1, section C-C) except for screw MS27039-1-07 and washer NAS1149C0332R which need to be installed at FS 169.34, WL 78.56 once existing bracket is removed.

5. Locate and install bracket assembly 412-060-715-123 (2, detail F) using screws (3), washers (4) and nuts (5). If sealant is blocking existing holes, remove sealant.

6. Locate and install bracket assembly 412-060-715-119 (6, detail G) using screws (7), washers (8), and nuts (9). If sealant is blocking existing holes, remove sealant.

7. Install bracket 412-060-715-127 as follows:

    a. Position bracket 412-060-715-127 (11, detail H) and shim 412-060-715-129 (10) on structure in accordance with detail H.

    b. Drill 3 holes using a No. 30 drill, locating the holes from the airframe.

    c. Remove all parts, deburr all holes and remove debris.

    d. Install shim (10) and bracket (11) using rivets (12, 13, and 14) and washer (15) on the far side.

8. Install doubler 412-030-460-101 as follows:

    a. Position doubler 412-030-460-101 (16, detail I) on structure making sure there is sufficient edge distance for all rivets.

    b. Drill 5 holes using a No. 30 drill, locating the holes from the doubler (16).

    c. Temporarily install anchor nut (18) in accordance with detail I, locate and drill remaining No.30 hole from anchor nut.

d. Remove all parts, deburr all holes and remove debris.

e. Install doubler (16) using rivets (17) and anchor nut (18) using rivets (19).

-NOTE-

To prevent twisting, interference, chafing, and preloading, do not tighten the fasteners until the correct routing and orientation of the N1 control cables is achieved. Clamp orientation may require adjustment to ensure smooth engine throttle control and that no fouling exists between the cables and any components or surrounding structure.

-NOTE-

Unless stated otherwise, remove and retain all hardware, including clamps, for use during the installation procedure.

-NOTE-

412-060-700 refers to the engine control cable installation (N1 cable). 412-075-802 refers to the engine electrical harness installation.

CAUTION

DO NOT KINK OR APPLY SHARP RADIUS BENDS TO THE N1 CONTROL CABLE DURING INSTALLATION OR DAMAGE TO THE N1 CONTROL CABLE MAY OCCUR.

9. Refer to Figure 1, section E-E, details F, G, H and I to correctly route and secure the N1 control cable installation. Detailed instructions are included in the figure.

10. Once the N1 control cable installation is complete, verify that both throttles operate smoothly over the entire range of operation and that there is no fouling.

-NOTE-

Steps 11 through 14 are only applicable to aircraft equipped with fuel provisions kit 412-706-112-125 (Aux. fuel kit)

11. If the aircraft is equipped with fuel provisions kit 412-706-112-125 (Aux. Fuel kit), replace tube assembly 212-060-668-001 (39, section K-K) with tube assembly 212-060-668-003 (40, section K-K) as follows:

    a. Remove and discard screw (41).

    b. Remove tube assembly 212-060-668-001 (39).

    c. Install tube assembly 212-060-668-003 (40) with screw (46, Detail L), clamps (44 and 45), spacers (42 and 47), washer (43) and nut (48).

12. Refer to Figure 1, section K-K view M and detail N to correctly route and secure the N1 control cable.

13. Remove and discard screw (50) and spacer (49).

14. Install screw (52) and spacer (51) with retained hardware.

15. Make an entry in the helicopter logbook and historical service records indicating compliance with this Alert Service Bulletin.

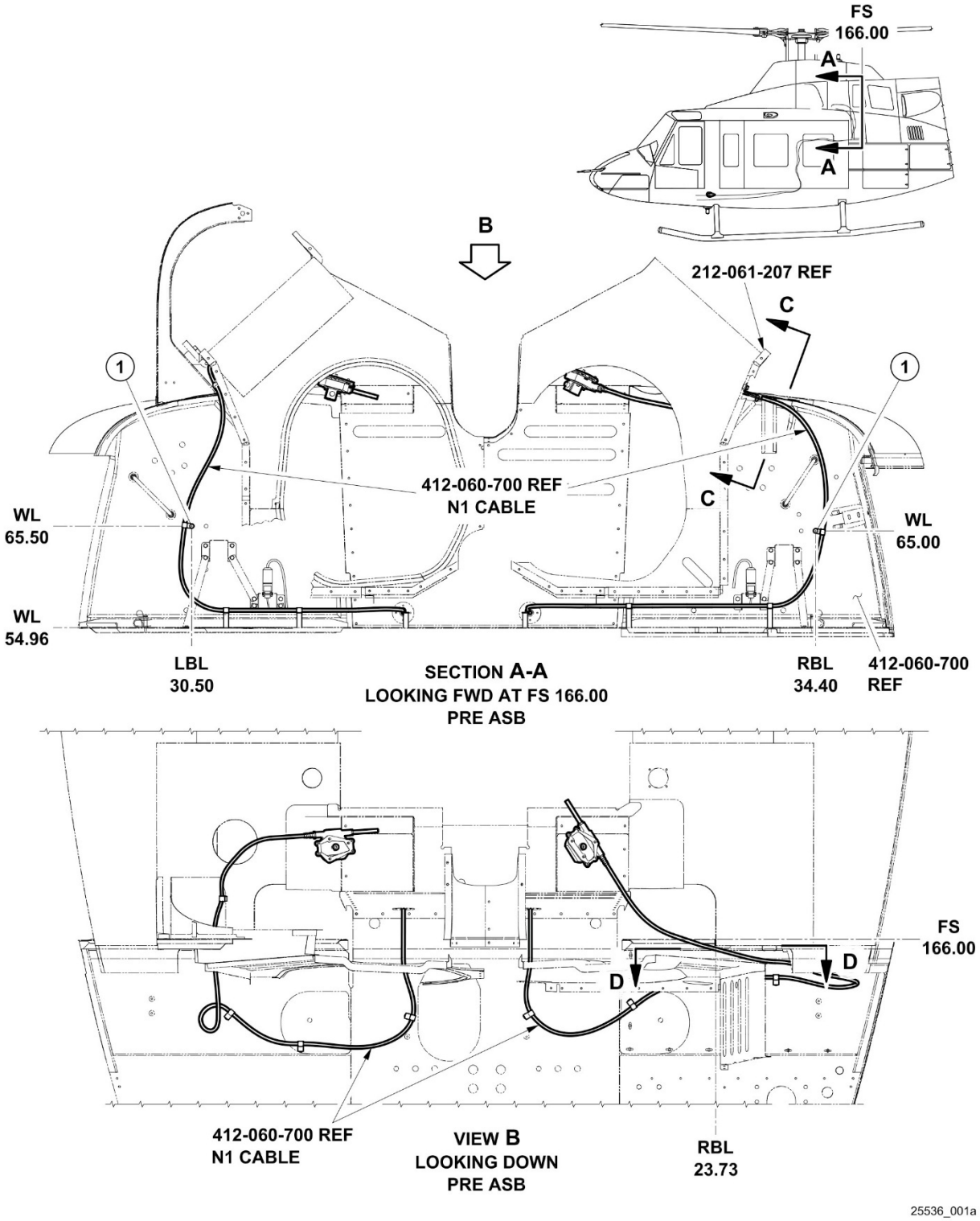

Figure 1 - N1 Control Cable Installation (Sheet 1 of 6)

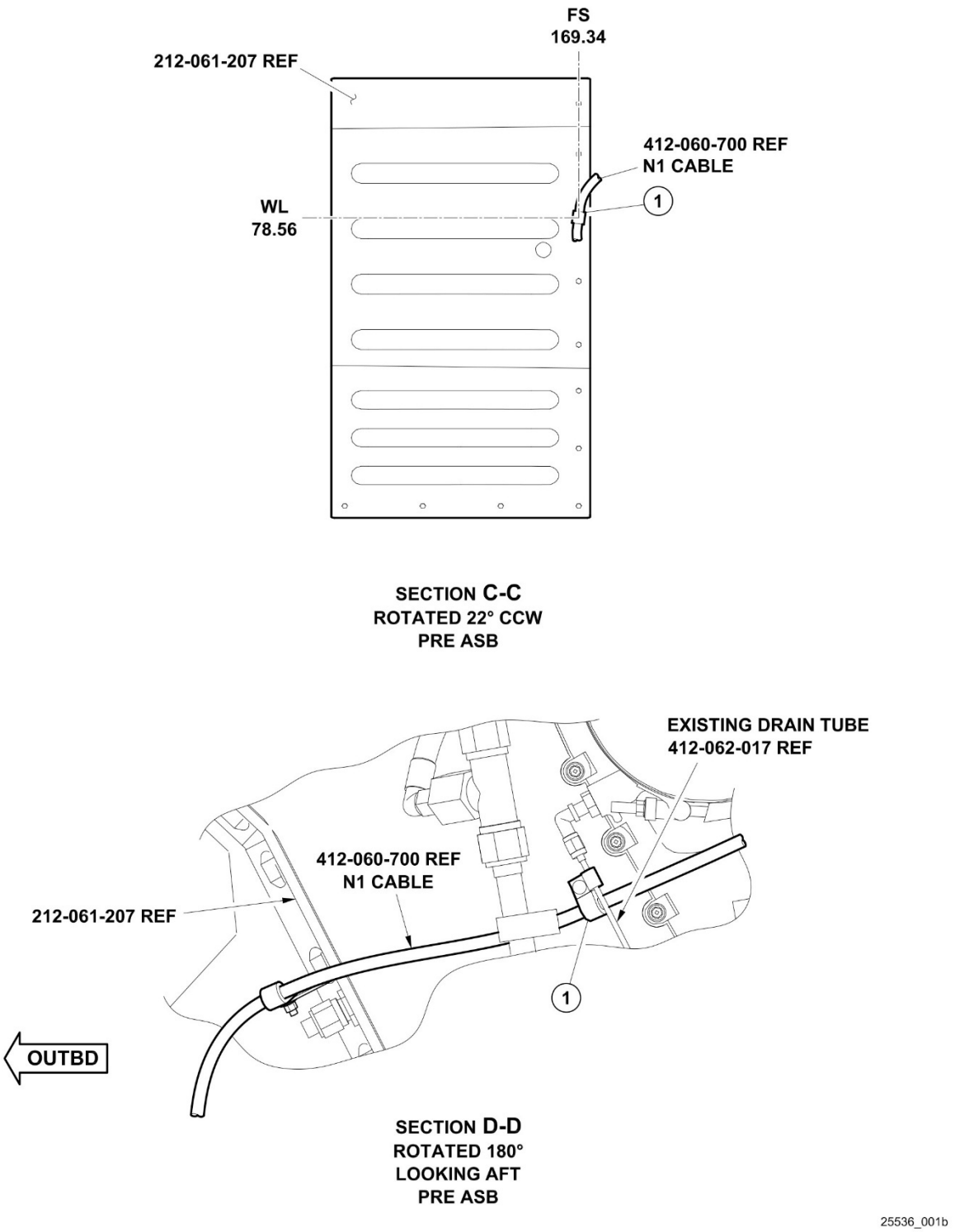

Figure 1- N1 Control Cable Installation (Sheet 2 of 6)

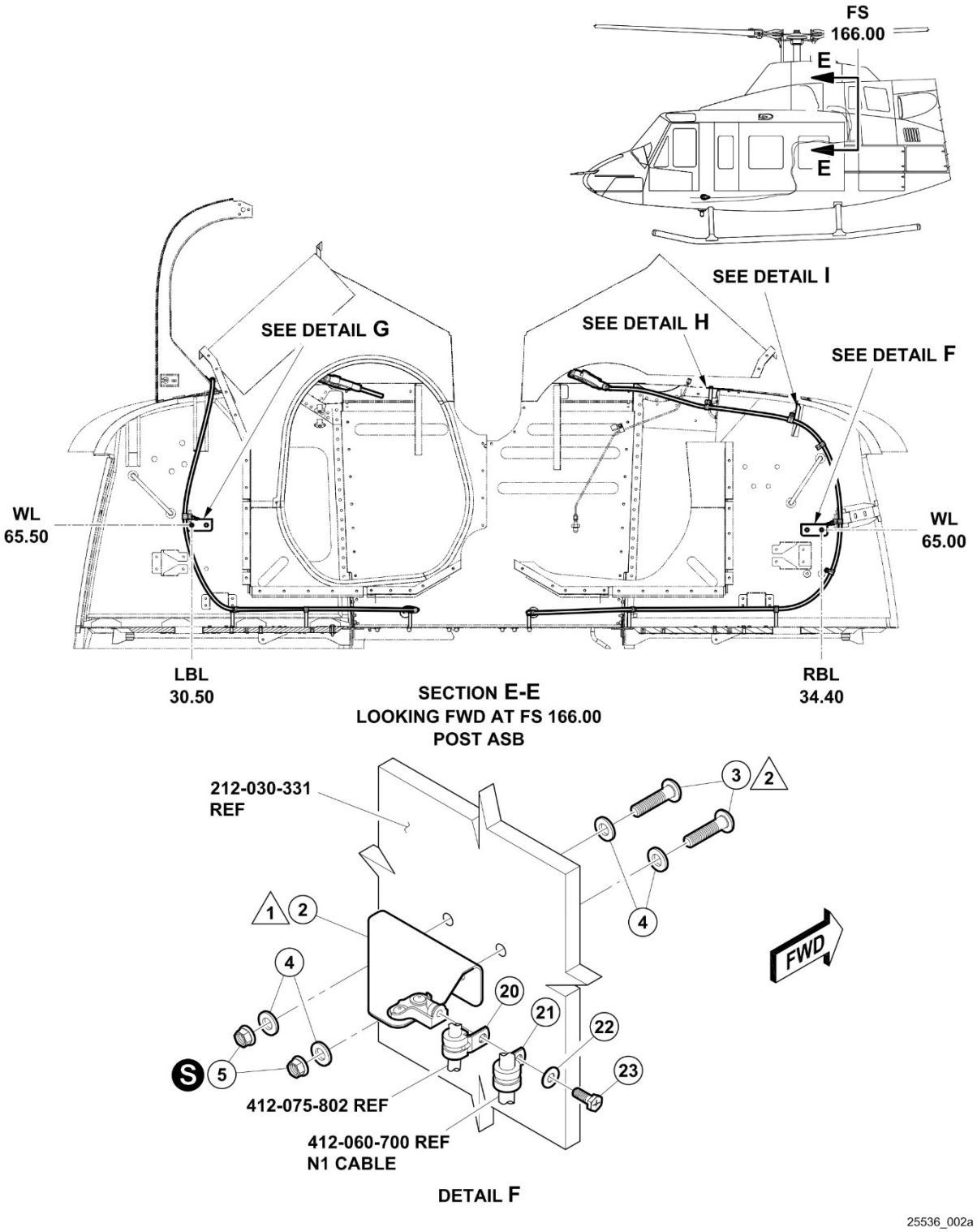

Figure 1 - N1 Control Cable Installation (Sheet 3 of 6)

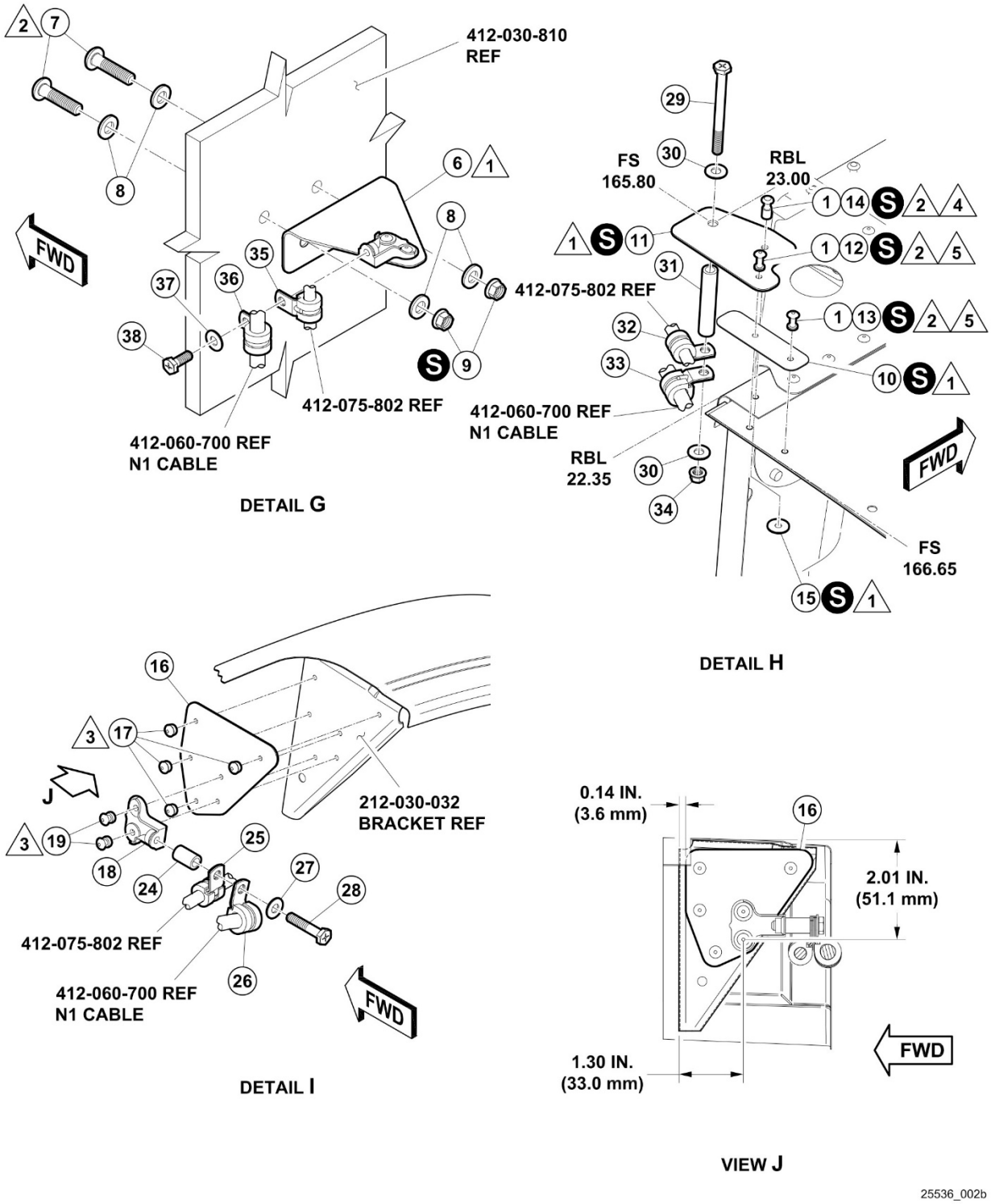

Figure 1 - N1 Control Cable Installation (Sheet 4 of 6)

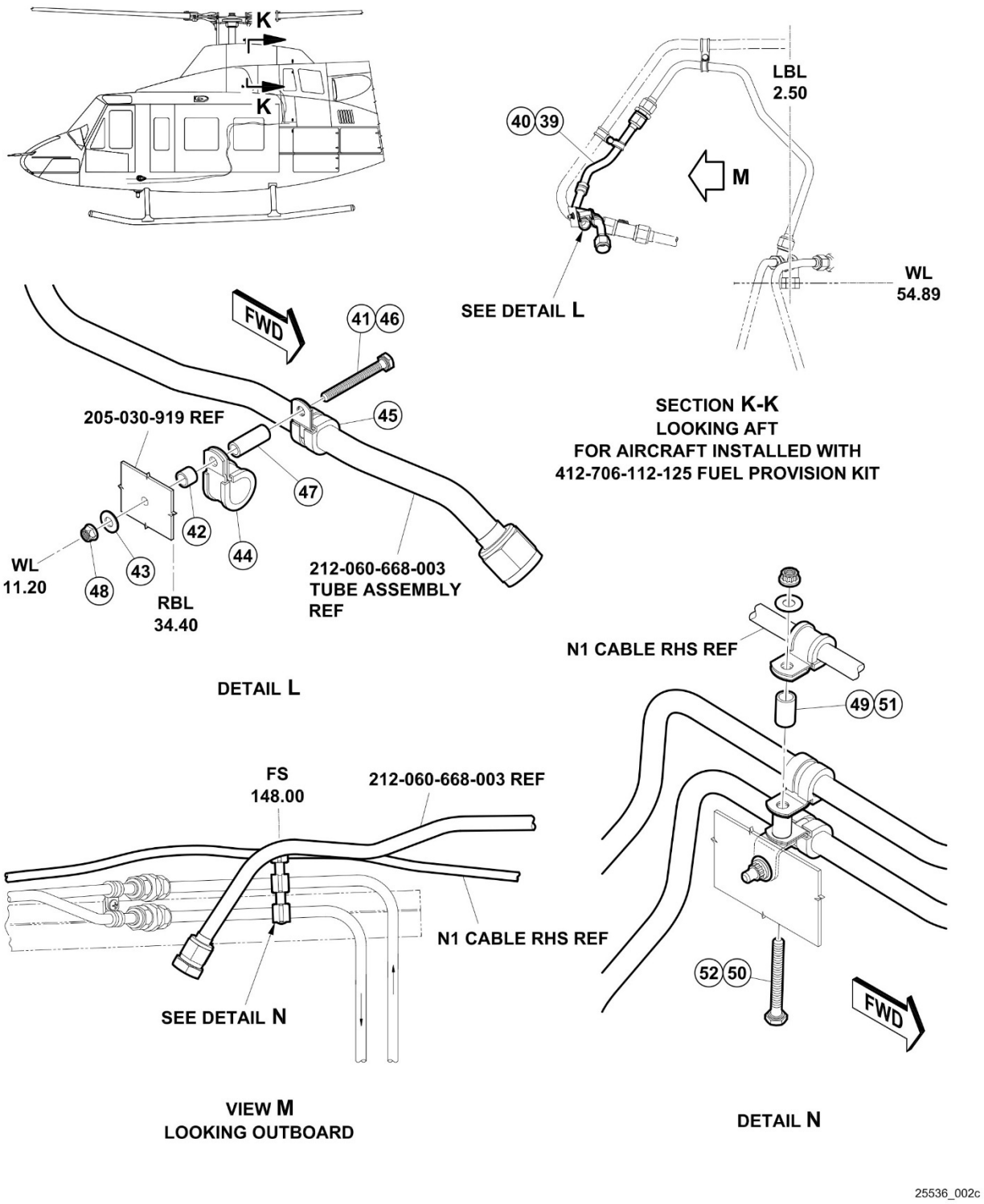

Figure 1 - N1 Control Cable Installation (Sheet 5 of 6)

1. Fastener
2. Bracket assy (412-060-715-123)
3. Screw (MS27039C4-16) 2 Reqd
4. Washer (NAS11490463R) 4 reqd
5. Nut (MS21043-4) 2 Rqd
6. Bracket assy (412-060-715-119)
7. Screw (MS27039C4-16) 2 reqd
8. Washer (NAS11490463R) 4 reqd
9. Nut (MS21043-4) 2 Reqd
10. Shim (412-060-715-129)
11. Bracket (412-060-715-127)
12. Rivet (MS20615-4M5R)
13. Rivet (MS20615-4M5)
14. Rivet (NAS1738M4-3)
15. Washer (NAS1149CN532R)
16. Doubler (412-030-460-101)
17. Rivet (MS20470T4-3-5) 4 Reqd
18. Anchor nut (90-002C3)
19. Rivet (MS20470T4-5) 2 Reqd
20. Clamp (AS21919WCH04Y)
21. Clamp (AS21919WCH05Y)
22. Washer (NAS1149C0332R)
23. Screw (NAS1802-3-8)
24. Spacer (NAS1057W3-050)
25. Clamp (AS21919WCH04Y)
26. Clamp (AS21919WCH05Y)
27. Washer (NAS1149C0332R)
28. Screw (NAS1802-3-15)
29. Screw (NAS1802-3-34)
30. Washer (NAS1149C0332R) 2 Reqd
31. Spacer (NAS1057W3-160)
32. Clamp (AS21919WCH04Y)
33. Clamp (AS21919WCH05Y)
34. Nut (MS21043-3) 1 Reqd
35. Clamp (AS21919WCH04Y)
36. Clamp (AS21919WCH05Y)
37. Washer (NAS1149C0332R)
38. Screw (NAS1802-3-8)
39. Tube assy (212-060-668-001)
40. Tube assy (212-060-668-003)
41. Screw (Ref)
42. Spacer (NAS43DD3-16N)
43. Washer (NAS1149C0332J)
44. Clamp (AS21919WDG09Y)
45. Clamp (AS21919WDG08Y)
46. Screw (NAS1801-3-26)
47. Spacer (NAS43DD3-52N)
48. Nut (MS21042L3)
49. Spacer (NAS43DD3-52N)
50. Screw (NAS1801-3-31)
51. Spacer (NAS43DD3-32N)
52. Screw (NAS1801-3-26)

S SEALANT (C-353)

NOTES

1. Seal faying surfaces with sealant (C-353).
2. Wet install with sealant (C-353)
3. If required, use larger blind rivet NAS1738M4 in lieu of MS20470T4 rivet.
4. If required, use NAS9307M-5 rivets instead of NAS1738M4 rivet paired with NAS1149CN832R instead of NAS1149CN532R.
5. If required, use larger blind rivet NAS1738M4 in lieu of MS20615-4M rivets.

25536_002d

Figure 1 - N1 Control Cable Installation (Sheet 6 of 6)