A Textron Company

ALERT SERVICE BULLETIN **407-25-143**

PSL # 2711

16 July 2025

MODEL AFFECTED: **407**

SUBJECT: **LANDING GEAR AFT CROSSTUBE LOWER SUPPORT RUBBER CUSHION, ONE-TIME INSPECTION OF**

HELICOPTERS AFFECTED: **Serial numbers 53000 through 53900, 53911 through 53999, 54000 through 54166, 54300 through 54752, 54805 through 54999, 56300 through 56398, 56400, 56401, 56403 and 56404.**

[Serial number 56399, 56402, 56405 and subsequent will have the intent of this bulletin accomplished prior to delivery.]

COMPLIANCE: **PART I**: Within 165 flight hours or 6 months whichever occurs first, following the release date of this bulletin.

PART II: Within 50 or 165 flight hours following accomplishment of **PART I** if discrepant rubber cushion is detected.

DESCRIPTION:

Bell has received reports of the aft crosstube rocker beam moving laterally outside of the aft fuselage fittings under specific ground maneuvers involving yaw and light weight on skids or slope landings. Following further investigation, the lower supports rubber cushions were found to be under the minimum thickness requirement. **PART I** of this bulletin provides instructions to inspect the affected parts and **PART II** of this bulletin provides instructions to replace any discrepant rubber cushions as required by **PART I**.

Applicability of this bulletin to any spare part shall be determined prior to its installation.

APPROVAL:

The engineering design aspects of this bulletin are Transport Canada Civil Aviation (TCCA) approved.

CONTACT INFO:

For any questions regarding this bulletin, please contact:

Bell Product Support Engineering
Tel: 1-450-437-2862 / 1-800-363-8023 / productsupport@bellflight.com

MANPOWER:

Approximately 0.5 man-hour is required to complete **PART I** of this bulletin. Approximately 2 man-hours are required to complete **PART II** of this bulletin. This estimate is based on hands-on time and may vary with personnel and facilities available.

WARRANTY:

Owners / Operators of Bell Helicopters who comply with the instructions in this bulletin will be eligible to receive non prorated replacement part as applicable, listed in the MATERIAL section of the bulletin. The mybell.com portal allocates specific warranty entitlement for an aircraft by serial number. The Product Service Letter (PSL) number which will be listed below the bulletin number on the introduction page will be a required field when submitting a claim on the Bulletins Tab for replacement parts, labor, and/or freight. If you receive an ASB or TB that does not have a PSL number, then there is no warranty entitlement for that bulletin.

Labor entitlement: Yes, $220.00 USD as required.

To receive parts, labor, under warranty:

- 400-052-015-105 Rubber Cushions and labor only are provided as required.
- Comply with the instructions contained in this Bulletin no later than the applicable date in the “compliance section”.
- If there is a PSL number identified in the bulletin you will be required to enter this PSL number which will validate warranty entitlement for the selected aircraft. Please ensure that you use the Bulletin tab when you file your claim.

NOTE: Customers who fail to comply with the instructions in this Bulletin before the compliance date will not be eligible for the special warranty listed above.

MATERIAL:

Required Material:

The following material is required for the accomplishment of this bulletin and may be obtained through your Bell Supply Center.

Part Number	Nomenclature	Qty (Note)
400-052-015-105	Rubber Cushion	A/R (1, 2)
400-052-015-101	Lower Support Assembly	A/R (1, 2)

NOTES:

1. Only required if rubber cushion is found under minimum thickness.
2. As an alternative, the Lower Support Assembly (-101) which includes a Rubber Cushion (-105) can be ordered depending on part availability. Lower Support Assembly (-101) replacement would be an owner/operator incurred expense.

Consumable Material:

The following material is required to accomplish this bulletin, but may not require ordering, depending on the operator's consumable material stock levels. This material may be obtained through your Bell Supply Center.

Part Number	Nomenclature	Qty (Note)	Reference *
2000-01022-00	Adhesive	1 PT (1)	C-317
5060-60154-00	Abrasive Paper or Cloth (180 grit)	A/R	C-406
Commercial	Abrasive Paper or Cloth (80 grit)	A/R	C-406
Commercial	Isopropyl Alcohol	A/R	C-285
2230-00451-00	Epoxy Polyamide Primer	2 OZ (1)	C-204
2100-00345-00	Chemical Film Material	1 QT (1)	C-100
2620-00073-00	Nonwoven Nylon Fabric	1 FT2 (1)	C-463
Commercial	Aluminum Alloy Sheet, 2024-T3, 0.032 inch (0.813 mm) thick	A/R (2)	C-472

* C-XXX numbers refer to the consumables list in the BHT-ALL-SPM, Standard Practices Manual

NOTES:

1. Quantity indicated is the format that the product is delivered in. Actual quantity required to accomplish the instructions in this bulletin may be less than what has been delivered.
2. Any type of aluminum alloy sheet 0.032 inch (0.813 mm) thick is acceptable for this application.

SPECIAL TOOLS:

None required.

WEIGHT AND BALANCE:

Not affected.

ELECTRICAL LOAD DATA:

Not affected.

REFERENCES:

407-MM Maintenance Manual, Chapter 32
Standard Practices Manual, BHT-ALL-SPM, Chapter 4, 5 and 7

PUBLICATIONS AFFECTED:

407-MM Maintenance Manual, Chapter 32

ACCOMPLISHMENT INSTRUCTIONS:

PART I: Inspection of rubber cushions

1. Prepare the helicopter for maintenance.

2. Measure and record the thickness of both aft crosstube lower support rubber cushions (Figure 1).

   a. If both rubber cushions are measured with thicknesses of 0.370 inch (9.398 mm) or more, proceed to step 3. **PART II** of this Alert Service Bulletin is not required.

   b. For any rubber cushion with a thickness between 0.330 inch (8.382 mm) and 0.369 inch (9.373 mm), **PART II** of this bulletin must be accomplished within the next 165 flight hours.

   c. For any rubber cushion with a thickness less than 0.330 inch (8.382 mm), **PART II** of this bulletin must be accomplished within the next 50 flight hours.

3. Make an entry in the helicopter logbook and historical service records indicating compliance with **PART I** of this Alert Service Bulletin.

PART II: Replacement of a discrepant rubber cushion

1. Prepare the helicopter for maintenance.

-NOTE-

The entire lower support assembly (aft strap) 400-052-015-101 can be replaced instead of replacing the discrepant rubber cushion.

-NOTE-

The landing gear assembly does not need to be removed from the airframe while the lower support assemblies are removed.

2. Remove the affected aft crosstube lower support assembly (aft strap) (DMC-407-A-32-01-00-00A-520A-A).

-NOTE-

Heat can be used to ease the removal of the discrepant rubber cushion(s). Do not heat the lower support over 250°F (121 °C)

3. Remove the discrepant rubber cushion from the lower support.

-NOTE-

Exposed aluminum surface shall be bonded within 24 hours of surface preparation.

   a. Remove any adhesive residue using 180 grit abrasive paper (C-406) until the bare aluminum is revealed.

   b. Clean the lower support using Isopropyl Alcohol (C-285).

-NOTE-

The rubber cushion machined surface is the roughest surface. This surface must be bonded to the lower support (Figure 2).

4. Vigorously abrade the machined surface of the new rubber cushion using 80 grit abrasive paper (C-406).

5. Clean the abraded surface of the rubber cushion using Isopropyl Alcohol (C-285).

-NOTE-

Rubber parts shall be bonded within 24 hours of surface preparation.

6. Form a piece of aluminum alloy sheet,0.032 inch (0.813 mm) thick, to an approximate radius of 1.250 inches (31.750 mm) in order to evenly spread the loads from the C-clamps (Figure 2).

7. The following steps must be used to bond the new rubber cushion:

-NOTE-

Ensure that the nonwoven nylon fabric (C-463) is not contaminated during handling.

   a. Trim nonwoven nylon fabric (C-463) to match the footprint of the rubber cushion.

   b. Apply a thin layer of adhesive (C-317) on mating surfaces of the abraded rubber cushion and lower support.

   c. Fully impregnate the nonwoven nylon fabric (C-463) by applying adhesive (C-317) to both sides of the fabric.

   d. Put the nonwoven nylon fabric (C-463) on the rubber cushion, this will control the final adhesive thickness.

   e. Center the rubber cushion/nonwoven nylon fabric on the aluminum lower support.

   f. Apply a firm pressure (maximum of 10 PSI (68.9 kPa)) using C-clamps and the formed piece of aluminum alloy sheet (Figure 2).

   g. Use the adhesive squeeze out to create a fillet seal around the rubber cushion.

-NOTE-

An acceptable alternative cure cycle is 2 hours at 180°F (82°C).

   h. Let the adhesive cure for 5 days at room temperature (65 to 85°F (18 to 29°C)).

8. Brush chemical film (C-100) on all bare aluminum surfaces.

9. Apply epoxy polyamide primer (C-204) over the dry chemical film and the adhesive fillet seal. Refinish as required.

10. Measure the aft crosstube lower support rubber cushion thickness and ensure the measurement is 0.370 inch (9.398 mm) or more. If dimension is below the limit, **PART II** must be accomplished again.

11. Install the repaired aft crosstube lower support assembly (aft strap). (DMC-407-A-32-01-00-00A-720A-A).

12. Make an entry in the helicopter logbook and historical service records indicating compliance with **PART II** of this Alert Service Bulletin.

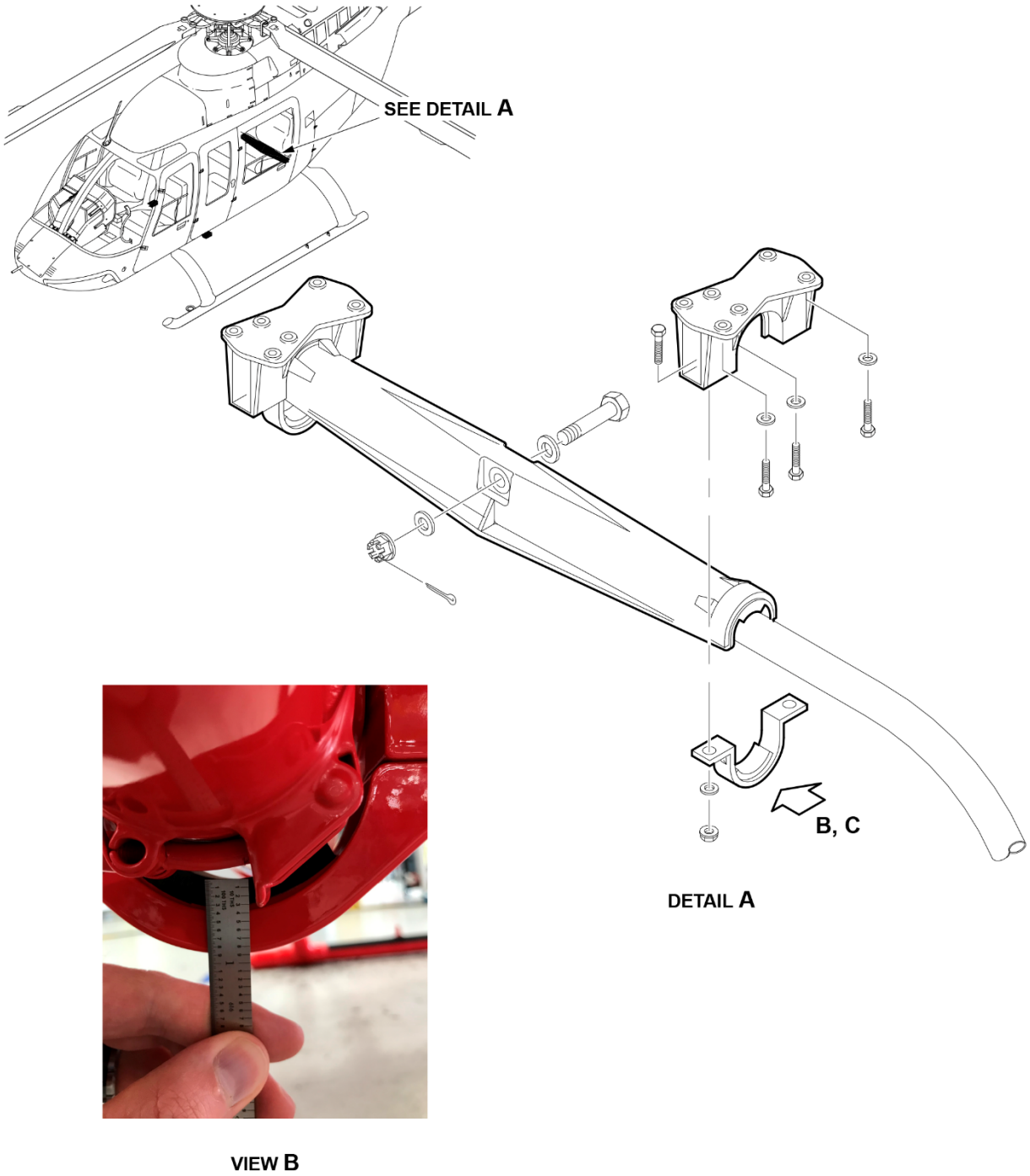

Figure 1 : Landing gear aft lower support rubber cushion thickness measurement

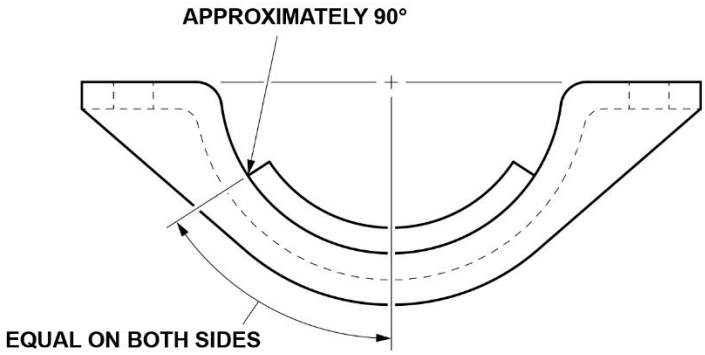

VIEW C

25510_001b

Figure 2 : Rubber cushion bonding – Example of clamping setup